2522 Kwina Road
Bellingham, Washington 98226
360-676-2772

Northwest Indian College Space Center USLI Team

2010-2011 NASA USLI Preliminary Design Review

November 19, 2010

Intentionally Left Blank

Table of Contents

Appendices

Intentionally Left Blank

Northwest Indian College Space Center
RezRiders
Preliminary Design Review

I) Summary of PDR Report

I.1 Team Summary

I.1a Team Name

Northwest Indian College Space Center RezRiders

I.1b Location

2522 Kwina Road, Bellingham, Washington, 98226,
48° 47' 23.87" N 122° 39' 40.65" W

I.1c Team Officials and Mentor

Gary Brandt – Team Advisor
David Oreiro – Assistant Team Advisor
William Munds – NAR L2 Mentor

I.2 Launch Vehicle Summary

I.2a Dimensions without motor

Length:	90.8 inches
Diameter:	Main Airframe – 4 inches; Science Payload Bay – 7.67 inches
Weight:	14.97 fully loaded except for motor
Fin Span:	20 inches
Center of Gravity:	50.73 inches from nose cone tip
Center of Pressure:	14.97 inches from nose cone tip
Static Stability:	3.29 (over stable)

I.2b Motor Choice

Aerotech K1275R

I.2c Recovery System

To ensure a successful flight and recovery, the rocket shall be equipped with a double redundant recovery system consisting of two PerfectFlite MAWD altimeters that are independent of each other.

I.3 Payload Summary

We are going to do the NASA SMD's scientific payload that monitors several weather and atmospheric phenomena. Additionally we are measuring rocket roll and science payload bay temperature.

II) Changes Made Since Proposal

II.1 Changes Made to Vehicle Criteria

Forward transition section has increased from 1 into to 3 inches in length. Our mentor suggests that making this change will decrease drag as well as create less turbulence for the fins.

II.2 Changes Made to Payload Criteria

We resubmitted science plan to include student made electronic monitoring devices instead of using off-the-shelf instruments. Students will be construction microcontroller controlled sensors and data loggers to monitor temperature, humidity, pressure, ultraviolet radiation, and solar irradiance. Furthermore, the team will build instrumentation to measure rocket roll and science payload by temperature throughout the flight.

II.3 Changes Made to Activity Plan

Since our scale rocket was completed quicker that scheduled, we were able to attempt a low-altitude test flight sooner than scheduled. The biggest change reflects scheduling due to the weather variability. High winds and precipitation have moved our flight test schedule two weeks later than originally planned. We've also scheduled additional high altitude tests to compensate for inclement weather

Other milestone changes were made to compensate for student and school demands. For example on 11/17 we had scheduled a BP ejection test; however, high winds created a power blackout at the college and we had to make schedule adjustments.

III) Vehicle Criteria

III.1 Selection, Design, and Verification of Launch Vehicle

III.1a1 Mission Statement

Through the USLI program the Northwest Indian College Space Center's RezRiders Team enhances its involvement in science, math, engineering and technology and encourages others in Tribal communities to do the same.

III.1a2 Mission Requirements

RezRider's Rocket shall:

1. utilize the Science Mission Directorate (SMD) option to build and fly a deployable science payload meeting the following minimum criteria:

    a. The payload shall gather data for studying the atmosphere during descent and after landing. Measurements shall include pressure, temperature, relative humidity, solar irradiance and ultraviolet radiation. Measurements shall be made at least every 5 seconds during descent and every 60 seconds after landing. Surface data collection operations will terminate 10 minutes after landing.
    b. The payload shall take at least 2 pictures during descent and 3 after landing.
    c. The payload shall remain in an orientation during descent and after landing such that the pictures taken portray the sky toward the top of the frame and the ground toward the bottom of the frame.
    d. The data from the payload shall be stored onboard and transmitted to the team's ground station after of completion of surface operations.
    e. Additional experiments include:
        i. Measure the science payload bay temperature
        ii. Detect and measure rocket roll

2. deliver the science payload closest to, but not exceeding an altitude of 5,280 feet above ground level (AGL).
3. carry two Perfect Flight MAWD altimeters for recording and one will be designated for the official altitude used in the competition scoring.
4. utilize recovery system electronics that has the following characteristics:

    a. Redundant altimeters.
    b. Each altimeter shall be armed by a dedicated arming switch and have a dedicated battery.
    c. Each arming switch shall be accessible from the exterior of the rocket airframe.

d. Each arming switch shall be capable of being locked in the on position for launch.
e. The recovery system shall be designed to be armed on the pad.
f. The recovery system electronics shall be completely independent of the payload electronics.

5. remain subsonic from launch until landing.
6. be designed to be recoverable and reusable.
7. use dual deployment recovery.
8. use removable shear pins for both the main parachute compartment and the drogue parachute compartment.
9. have a landing velocity under the main parachute between 17 and 22 ft/s, inclusive.
10. have a descent rate under the drogue parachute between 50 and 100 ft/s.
11. be capable of being prepared for flight at the launch site within 4 hours, from the time the waiver opens at the field until RSO inspections have been successfully completed.
12. be designed to land within 2500 ft. of the pad with a 10 mile/hour wind.
13. be capable of remaining on the pad for 1 hour before launching without losing the functionality of any vehicle or payload component after being fully armed for launch.
14. be launched from a standard firing system (provided by the Range) that does not need additional circuitry or special ground support equipment to initiate the flight or complicate a normal 10 second countdown.
15. Data from the science or engineering payload shall be collected, analyzed, and reported by the team following the scientific method.
16. use a GPS tracking device that transmits the rockets position to the ground.
17. use only commercially-available motors that have approved and certified by the National Association of Rocketry (NAR), Tripoli Rocketry Association (TRA) and/or the Canadian Association of Rocketry (CAR).
18. not use motors which expel titanium sponges (Sparky, Skidmark, MetalStorm, etc.).
19. provide our launch equipment and motors, with the exception of the electronic launch system which will be provided by the range.

Furthermore

20. We shall successfully launch our full scale rocket prior to Flight Readiness Review (FRR) in its competition flight configuration, and,
21. The flight certification form will be filled out by Bill Munds our L2 NAR mentor and observer.

III.1a3 Mission Success Criteria

Criteria number 1 is no individual is harmed or put at risk through the team's failure to successfully identify and mitigate a hazard.

Flight success criteria:

- attain an altitude within .01% of 5280 feet
- rocket launches as designed
- drogue parachute deploys at apogee
- main parachute deploys at 500 feet above ground level
- descent rates are within design parameters
- rocket is recovered with minimal damage and able to be launched again within four hours

Picture success criteria:

- Pictures are oriented within 95% of normal viewing orientation

Science payload success criteria:

- 85% of the measurement applications function as designed
- 100% of the data is collected from the functioning science applications

III.1b Schedule and Time Line (milestones in bold italics)

October 2010:

1 One electronic copy of the completed proposal due to NASA MSFC.
4 Web presence established
4 Post proposal and MSDS on website
5 Parts ordered for scale rocket
12 Schools notified of selection
12 Order altimeters
13 Construct scale rocket
14 Order science payload components
20 Meet with Bill Munds, NAR L2 mentor
21 USLI team teleconference (tentative)

November 2010:

3 Test recovery ejection systems
3 Begin assembling and testing payload components
6 Dual deployment test & NAR L2 certification flights
6 Launch scale rocket
19 Preliminary Design Review (PDR) report and PDR presentation slides posted on the team Web site
29 Competition rocket construction complete
30 Competition rocket low-altitude test flight

December 2010:

6-10 Preliminary Design Review Presentations (tentative)

January 2011:

15 launch competition rocket
24 Critical Design Review (CDR) reports and CDR presentation slides posted on the team Web site.

February 2011:

2-8 Critical Design Review Presentations (tentative)
19 launch competition rocket

March 2011:

12 launch competition rocket
21 Flight Readiness Review (FRR) reports and FRR presentation slides posted on the team Web site.
28-31 Flight Readiness Review Presentations (tentative)

April 2011:

13 Travel to Huntsville
14-15 Flight Hardware and Safety Checks (tentative)
16 Launch Day

May 2011:

9 Post-Launch Assessment Review (PLAR) posted on the team Web site.
20 Announcement of winning USLI team

III.1c Design Review at System Level

The overall vehicle stands 90.8 inches tall with an airframe diameter of four inches and a science payload bay 7.5 inches in diameter. The nosecone is LOC Precision 12.8 inches long ogive shaped and made of polystyrene. The phenolic airframe is also manufactured by LOC Precision. Three trapezoidal fins are attached through-the-wall to the 54 mm motor tube 1/2 inch above the aft edge of the airframe. The fins are fastened in place with West Systems 2-part epoxy resin and reinforced with a fiberglass inlay across the inside. The overall rocket dimensions are shown in Figure 1 below.

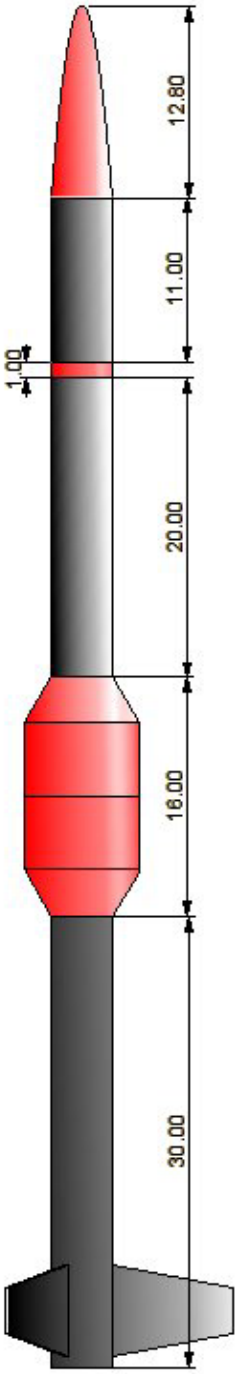

Figure 1

III.1c1 Airframe

The airframe houses the parachutes, recovery electronics, payload, motor and motor mounts, bulkheads, nosecone, fins, and other instruments in an aerodynamic structure. The airframe is nominally four inches in diameter and 90.8 inches long and weighs 14.97 pounds exclusive of the motor. The outer structure of the rocket consists of an airframe, science payload bay, fins and a nosecone. The airframe is constructed from phenolic airframe tubes manufactured by LOC Precision.

III.1c2 Nosecone

The nosecone is a commercial 12.8 inches long ogive-shaped nosecone with a 3.75 inch shoulder made of polystyrene. We have modified the nose cone by removing the aft end and replacing it with ¼ inch aircraft grade birch plywood removable bulkhead. This allows us to place our GPS transmitter well away from all other electronics and provides a suitable area for the GPS antenna. The nosecone is removable to allow access to the GPS tracking unit and is rigidly attached to the forward end of the airframe with screws. Its weight is 5 ounces without the GPS unit.

GPS Tracker mounted on nose cone insert along side hand-held GPS receiver

III.1c3 Drogue Parachute Recovery Bay

The next section is the drogue parachute recovery bay which is 11 inches long and is fastened to the nose cone. Its weight is 7 ounces.

III.1c4 Altimeter Electronics Bay (ebay)

The altimeter electronics bay is the next portion of the airframe. It adds 1 inch to the rocket's length and itself is 6 inches long. It houses the two PerfectFlite MAWD altimeters for redundant dual deployment. It constructed from a 6 inch tube coupler which fits over a heavier "stiffy". Each end is capped with birch aircraft plywood bulkheads. An eyebolt, two black powder cups, and connecting posts for the electric match wires finish each end. The two MAWD altimeters and batteries are held in place on a plywood sled that slides on two ¼ inch threaded rods. Everything is fastened together by bolts and wing nuts on either end of the threaded rods. Figure 2 illustrates the altimeter electronics bay. Its weight is 22 ounces with the electronics.

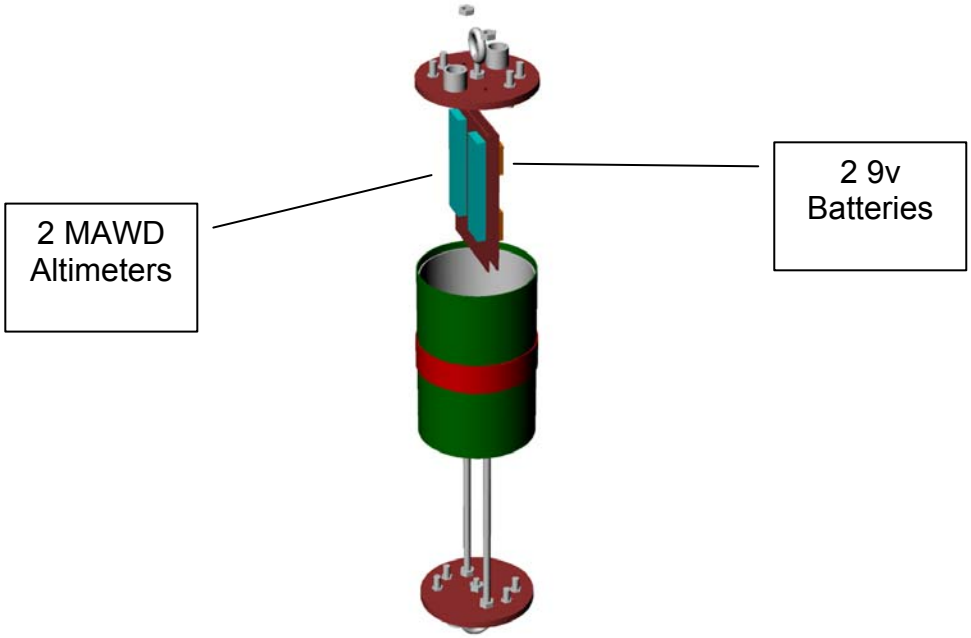

Figure 2

III.1c5 Main Parachute Recovery Bay

The main parachute recovery bay is 20 inches long of which 3.75 inches of either end are allocated for the nose cone shoulder and the altimeter electronics bay connector. Its weight is 8.04 ounces.

III.1c6 Science Payload Bay

The science payload bay is custom built from a 10 inch length of 7.51 inch diameter phenolic airframe tubing from LOC Precision. The fore and aft transitions, from 7.51 inches to 4 inches, are created from a fiberglass plug and they themselves are fiberglass. The bay is horizontally sliced mid way between the fore and aft ends. They are joined via screws into a phenolic body tube coupler that is permanently attached to the lower section and which the upper section slides over. The interior holds four ¼ inch threaded rods that run the 10 inch length of the section. This is where the microcontroller boards for the experiments as well as the batteries are fastened. Tube couplers, bulkheads and centering rings are fastened at either end for connection to the 4 inch airframe. Its weight is 55.66 ounces without the electronics. See Figure 8 for a conceptual drawing.

III.1c7 Fin Can

The last section is the fin can. It is 34 inches of 4 inch phenolic airframe tube from LOC Precision. The 27 inch long, 54mm diameter motor mount is secured in place with epoxy resin and three centering rings, one at either end, and one abutting the leading edge of the fin tabs that penetrate the airframe and butt against the engine mount. Its weight, including the three fins is 39.57 ounces. Figure 3 illustrates the components.

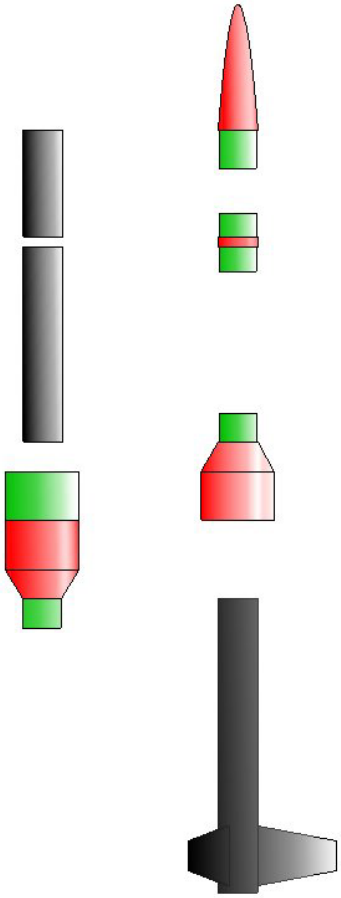

Figure 3

III.1c8 Fins

Three ¼ inch aircraft grade birch plywood fins are placed 84.5 inches from the nose of the rocket to provide stable flight. The fins have a trapezoidal shape with a surface area of 75.6 square inches. The fins are larger than necessary to compensate for the hypothesized turbulence generated by the science payload pay. Our plan is to have them long enough to be in the smooth air stream beyond the science payload bay.

The fins have a tab and are mounted through the airframe wall and butt against the motor mount. They are fastened to both the airframe and to the motor mount with West Systems epoxy resin. Furthermore, the fin tabs are bonded to the motor mount with fiberglass and epoxy resin. The fiberglass runs from the top of one fin tab, over the motor mount and to the top of the adjacent fin tab; the fiberglass is then coated with West Systems epoxy resin to bond all in place. The photos below show this arrangement. A diagram of the fin is given in the Figure 4 below.

Figure 4

III.1c9 Bulkheads and Centering Rings

The bulkheads provide shock cord mounts, confine the different components, and protect the components and electronics from black powder charges ignited during recovery system deployment. Eye-bolts are used on the bulkheads to provide a connection point for the recovery harnesses. The material for all bulkheads is ¼ inch aircraft grade birch plywood. This material was chosen because of its high strength, durability, it's easy to shape with woodworking tools. It is suitable for protecting the instruments in the payload and the altimeters from the black powder charges used in the recovery system. The bulkheads are secured in place using West System epoxy resin.

Three centering rings are used to align the 27 inch motor mount within the 4 inch fin can. One centering ring is located 1/2 inch from the aft end of the motor tube and the other is located 25 inches from the aft end of the motor tube. The centering rings consist of 1/4 inch aircraft grade birch plywood. Birch plywood is very cost efficient, easy to fabricate, and extremely lightweight.

Two centering rings, one at either end of the science payload bay, are used to attach the fore and aft transition sections as well as provide support for the airframe couplers that attach to the rest of the rocket.

III.1c10 Motor Mount, Motor retainers and Couplers

The material used for the motor tube and couplers is phenolic tubing from LOC Precision. The phenolic tubing is structurally stable and will not soften under reapplied heat. The tubing is used to protect and house the motor, the avionics, the science experiments and to provide a stable structure to contain and constrain the motor. The motor tube is 27 inches long with a 54 mm (2.14 inch) diameter and is located 63 inches from the tip of the nose cone. Phenolic tubing is commonly used for motor tubes on rockets. The tubing is cut to size and secured in position using West System epoxy. A coupler is used to join together the different sections of the airframe and house payload or recovery instrumentation. The coupler slides into the inner diameter of the airframe and is held in place by epoxy on one end of the section and held to the other end with

shear pins. The shear pins prevent the rocket from premature separation due a combination of drag, inertia, and momentum. The shear pins are, however, designed to fail when the black powder ejection charge is ignited.

The motor retainer is made from a pair of #12 blind or T-nuts and 2 inch #12 bolts. The T-nuts are fastened to the underside of the aft motor mount centering ring and then are secured with West Systems epoxy resin. The bolts clamp metal brackets over the aft end of the motor casing to secure the motor in place throughout the flight and recovery of the rocket. See Figure 4.

III.1c11 Propulsion System

The selected motor must provide stable flight for the rocket and reach the desired altitude. An appropriate thrust-to-weight ratio as well as sufficient lift-off speed are necessary for a safe flight. The thrust-to-weight ratio is an indicator of flight stability by making certain that the motor has the necessary power to accelerate the rocket to a safe lift-off speed. Additional stability is provided by the force that the fins on the rocket provide. Sufficient velocity prior to the rocket leaving the stability-inducing guide rail is necessary to increase the fin force so that the rocket is stable once it has left the guide rail. In general, a minimum thrust to weight ratio of five is recommended for flight, but a higher ratio can be necessary for stronger winds. RockSim 9 has consistently over estimated the altitude of our previously flown rockets and we have had to make adjustments in RockSim in order for its predictions to match the actual flights. Therefore, prior to the actual flight, we are choosing an Aerotech K1275R motor as our initial motor to test our rocket. RockSim predicts an altitude of 6250 feet AGL. RASAero predicts an altitude of 4061 feet while OpenRocket predicts and altitude of 5300 feet.

III.1c12 Motor Selection Procedure

Using RockSim, several motors were analyzed and considered for use. All are Areotech K size motors. The primary considerations for the motors were the average thrust and total impulse. The average thrust was used to determine if the motor would provide the necessary thrust to weight ratio for stable flight. Once that was determined, the motor was tested in RockSim and OpenRocket to find the predicted altitudes. Using a predicted altitude, an estimate of the total impulse was found that would meet our requirements All three motors that were considered meet the minimum thrust to weight ratio and havehe necessary total impulse to reach the competition altitude. The ratio was derived with this formula:

Thrust to Weight Ratio = Pounds of Thrust/Weight of RezRider

Figure 5 illustrates the “best” choices given the information that we have at hand. Test launches will be used to refine the motor selection. The uncertainty in all of this is that we are not certain whether or not any of the simulations accurately calculate the non-standard airframe design. We know that the motors are big enough to get the rocket safely off the launch rail. We do not and will not know

how close the predicted altitude will be to the actual altitude. Until we get some actual flight data, our motor choice is based on speculation with the best information that we have.

Newtons	Pounds	Ratio	Motor	RocSim Altitude	Lift Off Velocity
862.878	193.983	12.958	K828FJ	6195	67.2
1066.155	239.681	16.011	K1275R	6251	80.1
430.600	96.803	6.466	K375NW	6504	73.1
545.300	122.588	8.189	K480W	6764	57.6
635.592	142.887	9.545	K700W	6815	64.3

Figure 5

Figure 6 shows Aerotech's data and the thrust curves associated with each motor.

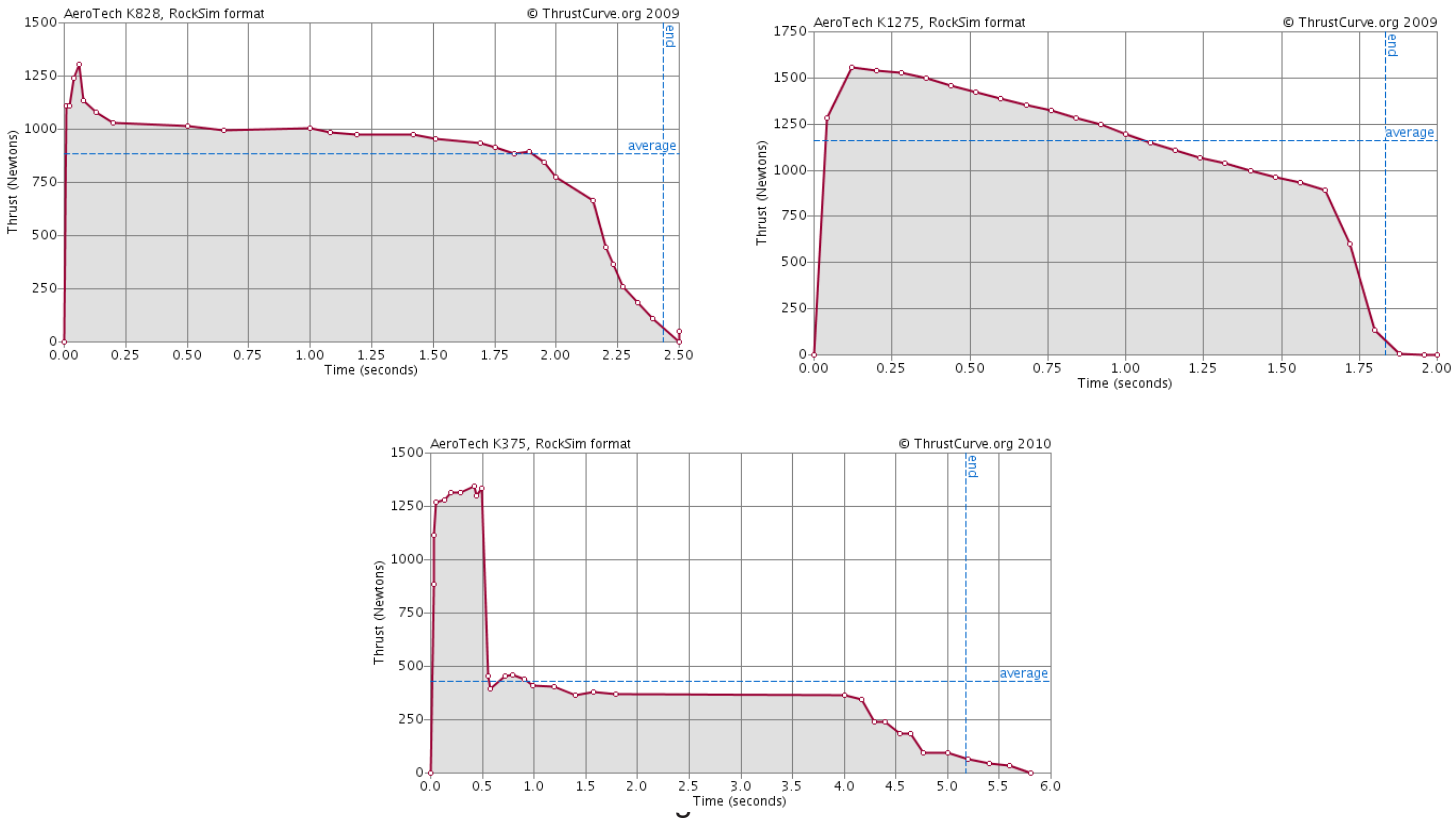

Figure 6

III.1d Subsystems that are Required to Accomplish the Overall Mission

- Airframe System – nose cone and rocket body
- Recovery System – altimeter fired drogue and main parachutes, GPS tracking
- Science Payload – science payload by and science experiments
- Propulsion System – motor, motor casing, and igniter
- Guidance System – fins
- Ground Support Equipment – Safety equipment, launch pad and launch controller
- Safety System – rules and guidelines awareness

III.1e Airframe and Flight Subsystems Verification Plan

We have constructed the entire scale rocket with the exception of the science payload bay which is still under construction. We have flown the rocket without the science payload and have tested these components:

• Launch and recovery of scale rocket	successful
• Garmin Astro 220 GPS tracking system ground test	successful
• Flight test of Garmin Astro 220 GPS tracking system	successful
• Black Powder ejection test without altimeters	successful
• Black Powder ejection test with altimeters	successful
• Flight test of dual deployment recovery system	successful
• Drogue deployment during flight test	successful
• Main deployment during flight test	successful
• Safe main parachute-to-ground descent rate	successful
• Science sensor modules ground tested after building	70%
• Predicted altitude	72% successful
• Launch rail and GSE equipment function	successful
• Recovery team performance	successful
• Range setup	successful
• Safety implementation	successful

III.1f Verification Plan and Its Status

To date we have accomplished the mission goals with minor schedule changes. We've adapted our Schedule and Time Line to reflect anticipated difficulties.

Mission	Criteria as of 11/19	Completion/Test Date	Data Recovery %	Success %
Scale rocket	Complete	10/20	N/A	100%
Scale rocket flown	Yes	11/6	N/A	100%
Altitude prediction	3000'	11/6	100%	72%
BP test	Eject drogue & main	11/3	N/A	100%
GPS tracker test	Track rocket	11/6	100%	100%
Competition rocket built	90% complete	11/19	N/A	
Competition rocket launch		11/30	N/A	
Competition altitude prediction	3000'	11/30		
Photography	Capture images	11/6	100%	100%
Photos properly oriented	98% vertical	1/15		
Competition rocket launch	Competition motor	1/15		
Altitude prediction	100%	1/15		
Prototype science modules built	50%	1/29		
Prototype science module tests	50%	1/29		
Actual science modules built		2/15		
Actual science modules flight tested				
Competition rocket launch	Competition motor	1/29		
Altitude prediction	100%	1/29		
Competition rocket launch	Competition motor	2/19		
Altitude prediction	100%	2/19		
Competition rocket launch	Competition motor	3/12		
Altitude prediction	100%	3/12		

III.1g Major Challenges and Solutions

Native American culture often times requires individuals to participate in cultural activities that require absence from school and or work. Therefore our biggest challenge will be to keep the team together and functioning as a unit for the entire duration of this project. “Life happens when you’re planning other things.”, Art Linkletter.

The second challenge is lack of experience. All of us are relatively new to ACP powered rockets having gotten involved in January 2010. We are very mindful of safety issues and have the utmost confidence that we are safe.

Our design process is build, test fly, evaluate, and make modifications and test fly again. This may appear to be unwieldy; however it does provide many more learning opportunities for the team. We do not have any engineering, electrical, design, or computer science departments that we can rely on for assistance. We are doing all of this through sheer determination to learn and have fun.

Winter weather in the Pacific Northwest has moderate temperatures, moderate winds and many days of low clouds and precipitation. This definitely impacts our testing ability. Fortunately, our low level launch area is only 2 miles for the college and we can activate our 3000’ FAA and Canadian AA waivers for any Saturday and Sunday mornings from 8:00 am through 12:00 pm. However, our high altitude launch area is a 6 hour drive into Washington’s interior which means weather can severely affect our high altitude test schedule.

	Probability	***Impact***	***Mitigation***
Fluidity in team membership	High	Lack of cohesion resulting in redundant learning/work	Spread the work and ideas among all of the members
Project falls behind	Moderate	Late hours required for task completion	Effective planning
Parts not arriving on time	Low	Incomplete vehicle	Create good relationships with vendors and order early
Design issues	Moderate	More time needed to build a competitive rocket	Make efficient use of time and Mentor
Delayed test flights because of weather	Moderately High	Insufficient testing for design validation and data acquisition	Have flexible launch plans for tests
Exceeding budget	Moderate	Design alterations	Proper budget management and foresight
Lack of expertise	High	Design alterations or outsourcing	Identify needs early and make proper arrangements

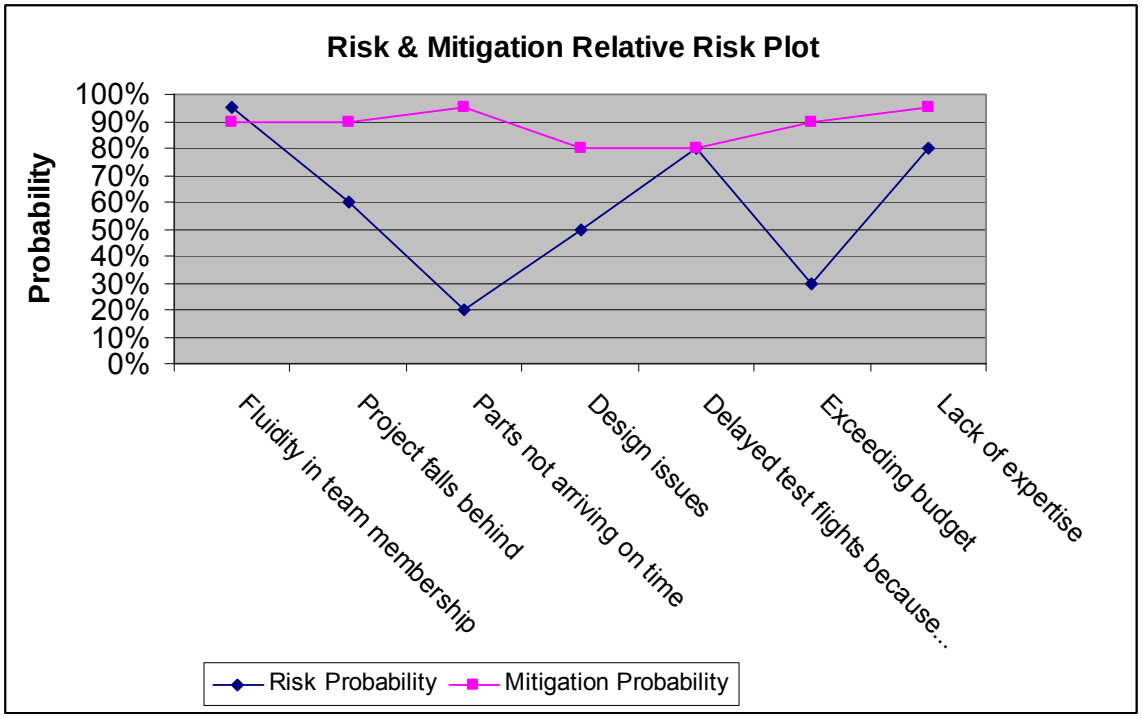

Personal Safety Hazards	***Potential Effects of Failure***	***Failure Prevention***
Individual health issues when working with epoxy, fiberglass, paint, etc.	Person will become sick or experience discomfort.	Wear appropriate safety clothing/equipment such as gloves and clothing to cover skin, face masks, etc. Have adequate ventilation. Have MSDS prominently posted.
Accidental injuries such as lacerations, bruises, etc.	Harm to team members (possible hospitalization).	Be attentive to task at hand. First aid kit is available.
Potential fire when working with flammable substances	Harm to team members (possible hospitalization).	Be aware of locations of nearest first-aid kit, fire extinguisher, and eye wash station
Untidy work area	Harm to team members (possible hospitalization). Loss of tools, hazardous working conditions	Everything has a place and everything in its place. Clean up debris during and after working.

Schedule Risks	***Potential Effects of Failure***	***Failure Prevention***
Team members have other obligations that interfere with presentations or launches.	Team participation decreases which results in lower membership.	Notify team members of any presentations, launches, or due dates well ahead of time.
Team has difficulties meeting set deadlines.	Deadlines will not be met.	Assign enough time for the completion of tasks.
Meeting times conflict with certain members' schedules.	Certain members will be unable to attend meetings and will miss important information.	Choose times that best fit the majority of the membership. The team shall also work with members that still have conflicts.
NWIC's exams and/or holidays overlap with deadlines set by USLI.	Reports or presentations might not be completed.	Check the dates of final exams, holidays, and major events against the USLI timeline and PLAN!.
NWIC sessions changes from fall to winter to spring quarter.	Team members' schedules will change.	Vote by majority for meeting times and plan accordingly.

Financial Support Failures	***Potential Effects of Failure***	***Failure Prevention***
Fundraising activities do not generate enough funds.	Team will be unable to have travel money for all of the members	Hold several small-scale fundraisers to allow for more diverse interest in the team.
Incorrect parts or supplies are purchased.	Delay in build sessions, and possible milestones.	Ensure all orders are verified by team officers.
Problems could arise with space grant funding for the team.	Delays in purchasing needed supplies and parts.	Adhere to budget guidelines and discuss financial matters with team advisor.

Structural Failures	***Potential Effects of Failure***	***Failure Prevention***
Fins fail during flight due to shear forces or inadequate use of adhesive.	Rocket will experience an unstable and unpredictable flight trajectory.	Use suitable building materials, through-the-wall fin mounting, and ample application of adhesive and fillets.
Rocket experiences drag separation during flight.	Rocket will prematurely separate, leading to early parachute deployment and a mission failure.	Ensure that all joints are secure and drill a hole in the body tube to equalize pressure between the interior of the rocket and the atmosphere.
Rocket joints do not separate at parachute deployment.	Parachute bay will experience over-pressurization from the ejection charge but will not deploy the parachute.	Conduct pre-launch separation testing.
Parachute deploys too early or too late in flight.	High-speed deployment causes the shock cord to produce a “zippering" effect.	Test the altimeter for drogue deployment at apogee and the correct deployment altitude for the main is set..
Rocket components are lost or damaged during transport to launch site.	Team risks not launching the rocket unless repairs can be made.	Pack components safely and securely for transport and have replacement components and needed tools available at the launch site.
Rocket structure is crushed due to in-flight forces.	Rocket will have a ballistic trajectory, and the mission is a failure.	Test, evaluate, test again
Center of gravity is too high or too low.	Rocket will be unstable or over stable.	Adjust weight so that center of gravity is 1-2 calibers ahead of center of pressure.
Center of pressure is too high or too low.	Rocket will be unstable or over stable.	Adjust fin sizing and position so that the center of pressure is 1-2 calibers behind the center of gravity.

Payload Failures	***Potential Effects of Failure***	***Failure Prevention***
Altimeter and/or science payload battery power supply fails	Avionics will fail to record data, resulting in the inability of the altimeter to eject the parachutes.	Check batteries prior to launch and have extra batteries located at the launch site. The team shall also use separate power supplies for each section containing electronic devices to prevent the failure of all electronics.
Wire connections in the rocket loosen during transport or flight.	Data will not be complete, causing a payload objective failure. Ejection electronics may not deploy parachutes, causing a ballistic recovery.	Secure wires with wiring loom and ensure that all wires are properly connected prior to launch.
Altimeter fails to record data during flight.	Altitude may not be properly measured resulting in parachute deployment failure.	Test the altimeter for functionality prior to launch. Calibrate the altimeter before launch.
GPS system fails to record the position of the rocket.	Recovery of the rocket will become more difficult. The rocket may possibly be lost.	Test the GPS before launch and use a secondary tracking system.
Avionics are broken during the transport, storage, or flight.	Data will not be collected, and the payload objective will be considered a failure.	Store equipment in a safe, dry place during both storage and transport.
Static discharge to electronics.	Electronic instruments are damaged.	Team members should properly ground themselves before handling electronics.

Recovery Failures	***Potential Effects of Failure***	***Failure Prevention***
Drogue and main parachute bays experience separation during flight.	Parachutes will deploy early, causing the rocket to miss the target altitude. A zippering effect may also occur.	Ground test shear pins and ensure proper pressure equalization in parachute bays.
Shock cords snap upon parachute deployment.	Rocket will experience an uncontrolled descent.	Test shock cords to ensure that they are sufficiently strong and long enough to withstand expected loads.
Altimeter fails to deploy the drogue and main parachutes.	Rocket will experience an uncontrolled descent.	Ensure that the altimeter is functioning properly prior to launch. A double-redundant ejection system will be used.
Drogue and main parachutes are packed too tightly to release.	Rocket experiences uncontrolled descent.	Ground test efficiency of the packing technique before launch.
Parachute melts or chars due to ejection charge heat.	Parachute becomes partially or entirely ineffective, causing an uncontrolled descent.	Use flame/heat retardant material between the parachute/shock cord and the ejection charge.
Parachute lines tangle upon deployment.	Parachutes will be ineffective, causing an uncontrolled descent.	Test deployment prior to launch and use a parachute/shock cord packing procedure that minimizes tangling.

Propulsion Failures	***Potential Effects of Failure***	***Failure Prevention***
Propellant fails on the launch pad.	Launch will be unsuccessful.	Test the ignition system and ensure that the connection points and the installation of the igniters are correct.
Igniter fails on the launch pad.	Motor of the rocket will fail to ignite.	Ensure that the igniter is secure before attempting ignition.
Motor centering rings fail.	Thrust vector is will not be aligned with the axis of symmetry, causing erratic and unpredictable flight.	Use strong centering rings that are well mounted and have holes in the true center.
Motor mount fails.	Rocket and the payload might be destroyed by the motor traveling up through the rocket body.	Test the motor mount system for correct construction. The team shall also conduct an inspection of the mounting system prior to launch.
Motor retention system fails.	Free-falling ballistic objects could be produced, possibly harming people around the launch site.	Use an adequate motor retention system to ensure that the motor will remain in the rocket.
Motor explodes on the launch pad.	Rocket will explode and the mission will be a failure.	Use appropriate casings for motors and stand an appropriate distance away from the launch pad at the time of ignition.

Launch Operation Failures	*Potential Effects of Failure*	*Failure Prevention*
Power supply for the ignition fails.	Rocket will fail to launch, and the mission will be a failure.	Ensure that the power supply is fully charged.
Launch rail buttons malfunction.	Launch will be unsafe, and the rocket could have an unpredictable trajectory.	Ensure that the rail buttons are securely attached to the rocket body and that they are correctly aligned with one another.
Fault igniter.	Motor will not ignite and the rocket will not launch.	Bring extra igniters to the launch site.
Rocket snags on the launch rail.	Launch buttons will strip off, causing the rocket to have an unpredictable trajectory.	Clean the launch rail and apply a lubricant, such as WD-40, prior to the launch.
Grass at the launch site catches on fire after launch.	Equipment will be destroyed and people at the launch site will possibly be harmed.	Use a fire-retardant blanket if the grass near the launch site is not excessively dry. Have a fire extinguisher readily available.
Rocket is carried out of range by the wind.	Rocket will be lost.	Not fly in heavy or unsafe winds. Use a GPS tracking device
Catastrophic motor malfunction on launch pad	Rocket is damaged, possibly destroyed.	Ensure proper fire safety devices are on hand to prevent any injuries to personnel.

III.2 Recovery Subsystem

To ensure a successful flight and recovery, the rocket shall be equipped with a double redundant recovery system. One PerfectFlite altimeter shall provide primary parachute deployment functionality. A second PerfectFlite altimeter will provide secondary deployment functionality. The rocket will carry a single drogue parachute and a single main parachute. Each flight computer shall control a separate set of ejection charges and shall have it own separate electrical system. Each set of ejection charges are to be ignited in sequence, with a short delay (~1 second) between ignitions. The primary drogue charge will ignite in sequence, beginning at apogee followed closely by the secondary drogue charge, and then the main charges shall ignite (primary then secondary) at approximately 500 feet AGL. We will use progressively larger charges, in the event that the primary charge does not deploy the applicable parachute due to a blockage inside the

rocket. Although the charges increase in power amount, all charges shall be calculated so as not to over pressurize the parachute bays of the rocket.

III.2a Black Powder (BP) Ejection Charge Determination

Factors that affect the amount of BP that will be needed:

- Diameter of airframe (base of nose cone)
- Volume of parachute chamber
- How tightly parts (airframe/coupler) fit
- Leakiness of the airframe

A starting point for determining the amount of BP to use is to determine the amount of desired force on the base of the nose cone. A suggested value is 150-200 pounds. The next step is to determine the amount of pressure (pounds per square inch - psi) that will produce the desired amount of force.

http://www.rouse-tech.com/pdfs/CD3_Manual06.pdf provides this information:

The ejection charge equation is:

$$Wp = dP*V/R*T$$

Where:

- dP is the ejection charge pressure in psi.
- R is the combustion gas constant, 22.16 (ft-lbf/lbm R) for FFFF black powder. (Multiply by 12 in/ft to get in terms of inches)
- T is the combustion gas temperature, 3307 degrees R for black powder
- V is the free volume in cubic inches. Volume of a cylinder is cross section area times length L, or from diameter D, V=L*p*D2/4
- Wp is the charge weight (mass, actually) in pounds. (Multiply by 454 g/lb to get grams.)

Our calculations indicate that for the main parachute bay:

			4Fg Black Powder Gas Properties		
Volume =	238.9	in^3			
Dia. =	3.9	inch	R =	22.16	ft*lbf/lbm/R
Length =	20	inch	Tc =	3307	R

Calculation Mass of Black Powder for a desired Ejection Pressure

Desired Pressure =	15	psi
mass BP =	**1.85**	grams
Ejection F =	179.2	lbf

And for the drogue parachute bay:

			4Fg Black Powder Gas Properties		
Volume =	131.4	in^3			
Dia. =	3.9	inch	R =	22.16	ft*lbf/lbm/R
Length =	11	inch	Tc =	3307	R

Calculation Mass of Black Powder for a desired Ejection Pressure

Desired Pressure =	15	psi	
mass BP =	**1.02**	grams	m=PV/R/T
Ejection F =	179.2	lbf	F=P*(pi/4)*d^2

Ground testing can reveal the minimum amount needed under ***ideal conditions***. It is usually best to not fly with the minimum amount of BP that works under ***ideal conditions*** .We did several tests of the black powder ejection charge prior to flying the scale model.

We used 1.9 grams of black powder for the main parachute ejection charge and for the drogue separation charge, we used 1.1 grams. These amounts resulted in successful separation for both ground tests and actual flight. The parachute bays are secured to the ebay subsystem by two #2-56 nylon screws acting as shear pins. The literature indicates that each screw has a breaking strength of 25 pounds (50 pounds total) which is well under the calculated ejection force for the main and drogue ejection charges.

III.2b Parachutes

We want the science payload to remain as vertical as possible during the recovery phase. Therefore both the drogue and the main parachutes will be deployed forward of the payload bay. The drogue will follow the ejected nose cone and the main will follow the ejected upper airframe section. Preliminary descent rates are 56 fps and 19 fps for the drogue and the main respectively. The following two charts illustrate the results of the parachute calculations based upon descent rates.

Calculation Results for Main Parachute at **19 fps (CD=1.5)**

Size	8.5	feet
	102	inches
Shroud Line Length	133	inches
Area	26.86	square feet
	3868.3	square inches

Calculation Results for Drogue Parachute at **56 fps (CD=1.5)**

Size	3	feet
	36	inches
Shroud Line length	47	inches
Area	3.35	square feet
	481.9	square inches

RockSim provides this recovery data:

III.2b1 Recovery system data

- P: Main Parachute Deployed at : 103.050 Seconds
- Velocity at deployment: 66.7834 ft/s
- Altitude at deployment: 499.95883 Ft.
- Range at deployment: 107.61720 Ft.
- P: Drogue Parachute Deployed at : 18.873 Seconds
- Velocity at deployment: 10.3646 ft/s
- Altitude at deployment: 6242.64916 Ft.
- Range at deployment: -214.49500 Ft.

III.2b2 Landing Data

- Successful landing
- Time to landing: 126.800 Sec.
- Range at landing: 208.41295
- Velocity at landing: Vertical: -20.5611 ft/s , Horizontal: 4.2501 ft/s , Magnitude: 20.9958 ft/s

III.3 Mission Verification Plan

	Ground Operations				Flight Operations		
Mission	Constructed	Test Date	Data Recovery %	Success %	Test Date	Data Recovery %	Success %
Barometric pressure	Yes	10/5	95%	90%	1/15		
Atmospheric temperature	Yes	10/8	100%	100%	1/15		
Relative humidity	No	11/30			1/15		
Solar irradiance	No	12/2			1/15		
Ultraviolet radiation	No	12/2			1/15		
Science payload bay temperature	Yes	11/30			1/15		
Rocket roll detection and measurement	Yes	10/5	100%	90%	1/15		
Photography	Yes	10/5	100%	100%	10/5	100%	100%
Target Altitude	N/A	N/A	N/A	N/A	11/6	100%	72%
GPS Tracking	Yes	10/30	100%	100%	11/6	100%	100%
Launch, Scale	Yes	N/A	N/A	N/A	11/6	N/A	100%
Launch, Full Size	90%	11/30	N/A	N/A	1/15		

III.3a Mission Performance Prediction

The goals of the RezRider's rocket is to safely deliver the payload to 5280 feet (AGL) conduct the science experiments and then safely descend to the earth using the redundant dual deploy recovery system. There are several parameters that affect the predicted performance of the rocket. To provide stable flight the rocket must maintain a stability margin between 1.4 and 2.0. The RockSim and OpenRocket models below show the location of the center of pressure and the center of gravity with the Aerotech K1275R motor installed.

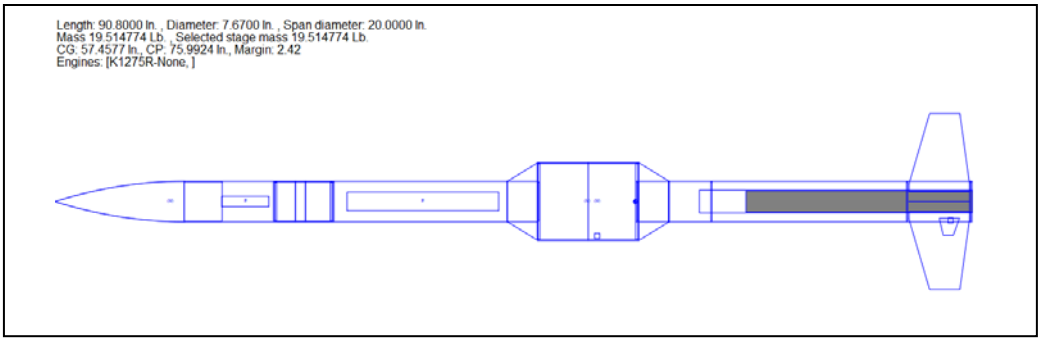

Figure 7 RockSim – RezRider

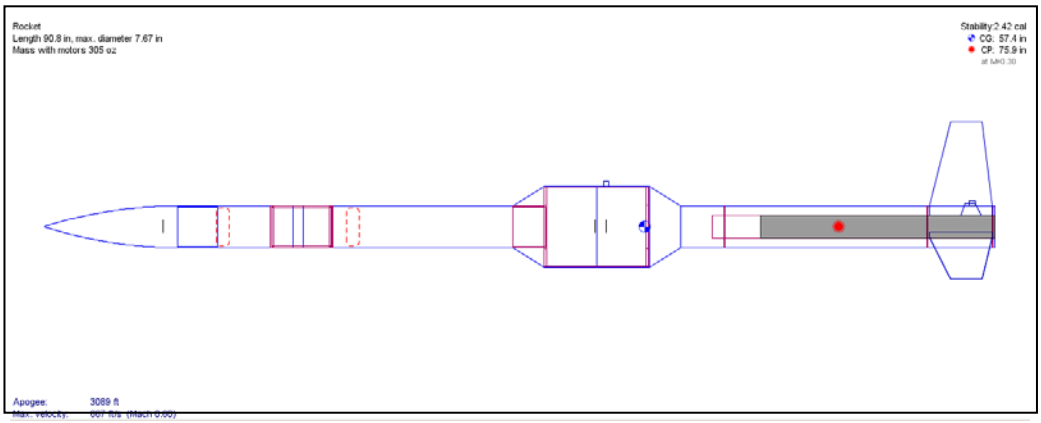

Figure 8 OpenRocket – RezRider

Both simulators derive the same basic information which is tabulated below

Center of Gravity	Center of Pressure	Static Margin	Length	Weight	Span
57.46	75.99	2.42	90.8	19.51	20

However, the altitudes vary considerably with RockSim reporting 6240 feet and OpenRocket reporting 3089 feet. Until we actually fly the rocket, we won't know which parameters to adjust and which simulator gives us the most accurate information. We want to tune both simulators so that predictions are accurate and comparable.

RockSim also predicted a drag coefficient of 0.25 while OpenRocket predicted 0.52. Using the same drag coefficient results in the predicted altitudes being very close for both simulators. We anticipated using up to three launches for data gathering in order to resolve the cd and altitude differences. The AeroTech K1275R provides RezRider with a thrust to weight ratio of 16 to 1 and giving it a velocity off the 72 inch launch rail of 80 feet/sec. The figures below show altitude and velocity of the flight respectively.

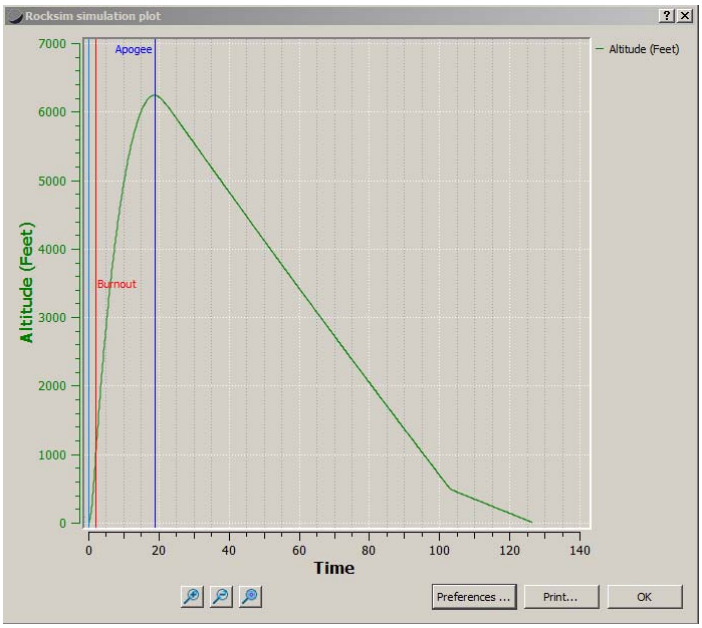

Altitude

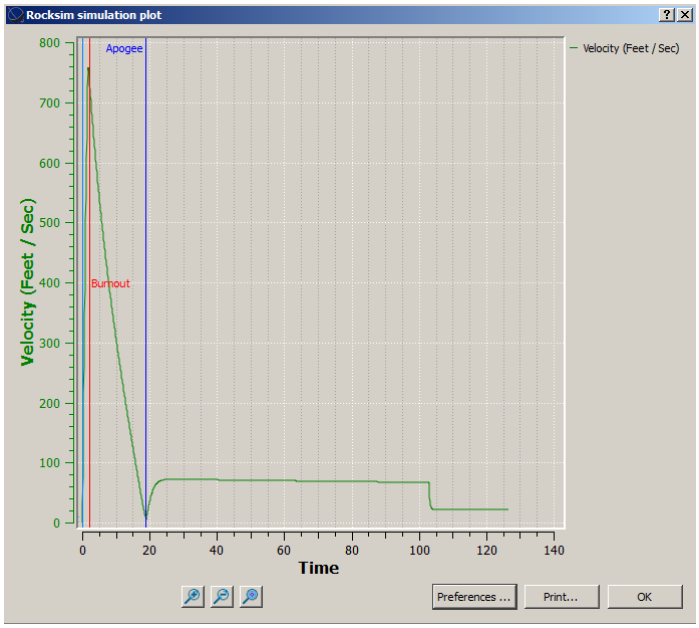

Velocity

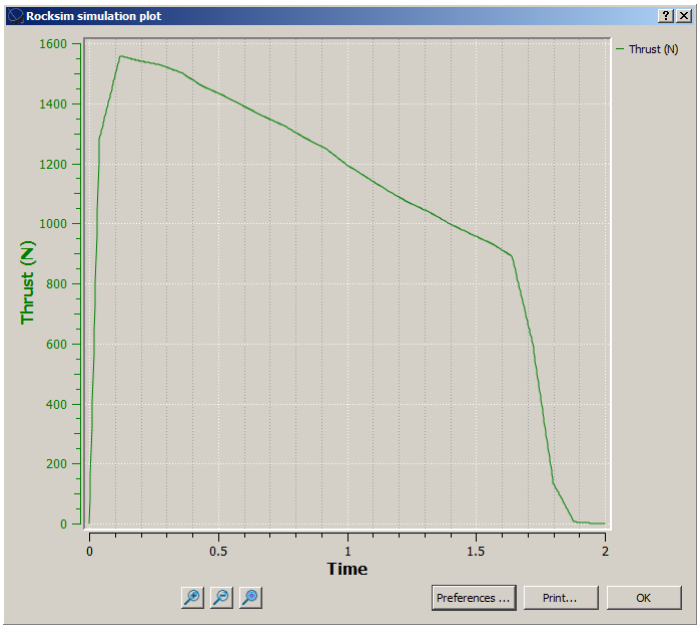

Thrust

III.3a1 Launch guide data:

- Launch guide length: 72.0000 In.
- Velocity at launch guide departure: 80.0357 ft/s
- The launch guide was cleared at : 0.178 Seconds
- User specified minimum velocity for stable flight: 43.9993 ft/s
- Minimum velocity for stable flight reached at: 24.1216 In.

III.3a2 Max Data values:

- Maximum acceleration: Vertical (y): 550.754 Ft./s/s Horizontal (x): 1.051 Ft./s/s Magnitude: 550.754 Ft./s/s
- Maximum velocity: Vertical (y): 758.4916 ft/s, Horizontal (x): 4.2533 ft/s, Magnitude: 758.6730 ft/s
- Maximum range from launch site: 214.49500 Ft.
- Maximum altitude: 6242.64918 Ft.

III.4 Payload Integration

The payload is designed to be easily integrated with the other subsystems. The payload team, the airframe team and the recovery team have been working closely together in order to determine the weigh of the payload within the rocket. The weight is a crucial parameter to optimize because this determines what size motor and parachutes are needed to reach the target altitude, bring the rocket and its payload safely to the ground as well as perform the science experiments.

Each experiment is self-contained and independent of any other experiment. We designed them in this fashion to give more students an opportunity to be involved in our project and to make the installation more flexible being easier to inspect and install several smaller devices rather than an integrated larger one.

The payload is designed so that all of the components can be assembled before launch day and then the instrument package can easily be installed into the rocket science payload bay at any time. On launch day fresh batteries will be checked and installed, and then the payload will be installed into the rocket. Screws will fasten together the upper and lower halves of the science payload bay.

III.5 Launch Operation Procedures

III.5a Launch System and Platform

Our launch controller has a continuity check light and switch, a key-locked power switch, and two independent normally open push buttons to close the circuit to the igniters. We have two sets of launch cables; one set is 100 feet long and the other is 200 feet long.

III.5a1 Ground Support Equipment

Our launch pad base is constructed of 1 inch black pipe. The base has three 36" long legs that are connected to a manifold that supports a 72 inch long T-Slotted Aluminum Extrusion Framing, 70 inches which are available for rocket guidance. The blast shield is a 1/16 x 18 x 12 inch steel plate mounted between the launch rail and the launch pad legs. See photos and drawing below.

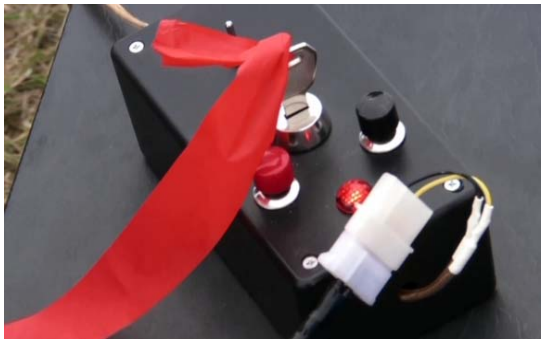

First Aid kits, a fire extinguisher, 4 foot rebar stakes and “Do Not Cross” tape, and a portable sound system round out our ground support equipment.

III.5b Final Assembly and Launch Procedures

Launch operations follow a very strict policy with safety being paramount. This accomplished by following a set routine which involves using a series of check lists. Each launch begins with a Safety review meeting and is followed by meticulously using supporting documents and the following checklists which are in the appendices. A summary of routine is as follows:

1. Prepare and install the ground support equipment
2. Prepare the electronics
3. Assemble the rocket
4. Pre-launch check list
5. Final launch check list
6. Post recovery
7. Clean up

Documents

- FAA/CAA Contact Schedule
- Liability Waiver
- HPR Safety Rules
- Flight Card

Checklists

- Ground Support Equipment
- Final Assembly Check List
- Pre-Launch Preparation
- Final Launch Preparation
- Post Recovery

III.6 Safety

III.6a Safety Officer

Responsible Person: Justin is the safety officer for the team. He is responsible for ensuring that all safety procedures, regulations, and risk assessments are followed. Justin is a member of the National Association of Rocketry and holds his Level 1 certification.

The Northwest Indian College Space Center has a 3000 foot waiver from US and Canadian aviation agencies that permits us to fly from 8:00am to 12:00pm on Saturday’s and Sundays.

III.6a1 Safety Rules and Regulations

1. All members of the team shall adhere to the NAR High Powered Safety Code. The NAR HPSC is attached as Appendix G.
2. All members of the team shall adhere to the National Fire Protection Association (NFPA) 1127: “Code for High Powered Rocket Motors”.
3. All members of the team shall be aware of Federal Aviation Regulations 14 CFR, Subchapter F Subpart C “Amateur Rockets”.
4. 4. All team members shall read and sign the "Range Safety Regulations" (RSR) statement. The RSR is attached as Appendix H.

This is a list of current team members and their respective National Association of Rocketry (NAR) or Tripoli Rocketry Association (TRA) certification levels. The two advisors are currently level 2 certified, which will allow us to use the appropriate motor, and Bill Munds, team mentor, shall be the designated owner of the rocket for liability purposes.

Bill Munds	Mentor	NAR L2
Dave Oreiro	Faculty	TRA L1, NAR L2
Gary Brandt	Faculty	NAR L2
Mariya	2nd year	TRA L1
Michael	1st year	TRA L1
Kyle	3rd year	TRA L1
Justin	3rd year	NAR L1
Patrisha	2nd year	NAR L1
Gordon		NAR L1
Paul	1st year	NAR
Nick	1st year	NAR L1
Krissy	1st year	
Thomas	1st year	NAR
Cathy	2nd year	

All team members will have been briefed as of Thursday, September 30, 2010 on the NAR High Power Rocket Safety Code and the risks involved with high power rocket launches.

III.6a2 Construction

1. The Airframe Lead has the final say while constructing any designs, subsystems, or sections of the rocket.
2. The safety officer is responsible for having all MSDS for hazardous materials. Also, the safety officer shall inform the team of any material or substance hazards before use. A sample MSDS sheet and hyperlinks to the MSDS sheets are located on our website: http://blogs.nwic.edu/usli
3. All team members are required to wear appropriate Personal Protective Equipment. The equipment includes, but is not limited to,

safety glasses, gloves, ear plugs, and breathing masks. The safety officer will notify team members when materials that require PPE are being used. If additional PPE is required, it is the safety officer's responsibility to obtain the additional equipment.

4. Safety glasses shall be worn when any member is using a tool that may create fragments of a material (Dremmel tool, hammer, band saw, etc.)
5. Power tool use requires at least two members be present. All team members shall wear the appropriate PPE.
6. Safety is the responsibility of all team members. The safety officer shall make all team members aware of any hazards, but individual team members shall be responsible for following all regulations and guidelines set forth by the safety officer.

Payload

Proper static grounding shall be utilized while handling sensor modules. Soldering requires adequate ventilation and safety glasses. None of the payload modules use electrical power greater than 9 volts.

A summary of safety hazards include adequate fastening together the science payload bay halves and the science payload bay itself to the rocket airframe. Details of the steps for safely working with the science payload bay and its contents are in Appendix C

III.6a3 Motors and Black Powder

1. All explosive materials shall be kept in the appropriate storage magazine located off-site on the property of Gary Brandt, the Team Official.
2. All extra black powder, e-matches, igniters, and any unused ejection charges will be stored in the magazine.
3. Any explosives being handled during launch day will be monitored by the safety officer.

III.6a4 Launch Operations

1. The area surrounding the launch pod shall be cleared of all flammable materials, such as dry vegetation, for a radius of at least 50 feet. The launch control box will be located at least 100 feet from the launch stand.

2. The launch rail shall not be inclined greater than 30 degrees from the vertical position.
3. An amplified audio system will be employed during launches.
4. Once everyone is a safe distance from the launch stand, the Range Safety Officer (RSO) will permit the Launch Control Officer (LCO) to connect the launch control system to the power source.
5. The RSO shall contact the appropriate aviation agencies 5-10 minutes prior to launch for clearance to launch.
6. After the RSO has received clearance and agrees that conditions are safe for launch, the system will be checked for continuity and then armed by the LCO.
7. The LCO shall check for aircraft and any other potential hazards and then commence counting down from 5 seconds.
8. The LCO shall activate the launch system when the countdown reaches zero.

III.6a5 Environmental Safety at the Northwest Indian College Launch Complex

1. All hazardous materials, such as black powder and epoxy, brought onto the field must be removed.
2. All trash will be removed prior to leaving the launch complex.
3. Motor remains must be disposed of properly.
4. All rockets shall be recovered. If a rocket is lost, the team will work with the appropriate Tribal office for further assistance.
5. The launch complex will be left as clean, or cleaner than it was prior to launching.

III.6a6 Recognition of Tribal, Federal, State, and Local Laws

The Northwest Indian College Space Center USLI team recognizes and adheres to all Tribal, state, federal, and local laws relating to the use of high power rockets. Each team member is required to sign a Range Safety Regulations (Appendix H) form acknowledging that they are aware of these laws and regulations. All team members are briefed on safety hazards and risks that will be present at any build sessions or rocket launches. The RSO shall conduct a safety meeting before any launch day. This meeting will include information about predicted risks, weather conditions, minimum distances from launch pad, and any changes in the launch waiver.

The RSO or her designee shall contact the proper authorities at the appropriate times to activate the waiver for launching. Appendix I lists the time frame and contacts for waiver activation.

Each team member understands and fully complies with the following safety regulations. These regulations will be enforced by the Safety Officer.

- FAA- Federal Aviation Regulations 14 CFR, Subchapter F, Part 101, Subpart C
- NAR High Powered Rocketry Safety Code
- NFPA 1127 “Code for High Power Rocket Motors”
- NAR High Powered Safety Code
- CFR Title 27 “Commerce in Explosives”

III.6a7 Interaction with Rocket Motors

Motors will be purchased by either Bill Munds or one of the appropriately certified officers. After motors are received they will be placed in the team’s motor magazine which is located off-site on the property of the Team Official, Gary Brandt. This magazine is an ATF-approved Type 4 container. A second, smaller magazine box is an ATF-approved Type 3 container and will be used to transport motors to and from the launch.

Arrangements for purchase, delivery, and storage of our motors for the USLI launch in April at Huntsville, AL will be performed by our NAR Mentor, Bill Munds.

IV) Science Payload

IV.1 Selection, Design, and Verification of Payload Experiment

We are going to do the NASA Science Mission Directorate’s scientific payload that monitors several weather and atmospheric phenomena. We are adding two additional measurements to the required list. The measurements that we’ll be monitoring are:

- Barometric pressure
- Atmospheric temperature,
- Relative humidity
- Solar irradiance
- Ultraviolet radiation

Additional Experiments

- Science payload bay temperature
- Rocket roll detection and measurement

The measurements shall be made at least every 5 seconds during descent and every 60 seconds after landing. Furthermore, surface data collection operations will terminate 10 minutes after landing. Data from the payload shall be stored onboard and transmitted to the ground station after completion of surface operations.

The secondary mission requires recording at least two pictures during descent and three after landing. The pictures need to portray the sky toward the top of the frame and the ground toward the bottom of the frame.

We will be dedicating a microcontroller, power supply and data logger for each sensor. Having a dedicated system for each sensor ensures that some data will be collected in the event of a single or multiple sensor malfunctions. A totally catastrophic failure is the only reason that we wouldn't be able to collect meaningful data.

There will be a stack of four BASIC Stamp microcontroller boards and their respective data logger electronics and power supplies. The microcontroller boards are 4 x 3 x 1 inches in size. A fifth layer will support the solar irradiance and ultraviolet radiation processing units. Figure 5 is a conceptual drawing of the science payload bay.

Our preliminary investigations for the design and construction of the scientific payload, indicate that the payload bay will have to be 7.5 inches in diameter and 10 inches long. It will have to descend as vertically as possible for some of the atmospheric measurements and for the photography. The science payload bay will be constructed from 7.5 inch diameter phenolic airframe tubing from LOC Precision and fiber glassed to provide strength and rigidity. The payload bay will be separated into two parts for ease of access to the components. The two halves will slide over a 7.5 inch airframe coupler and secured with self-tapping screws. Fore and aft transitions from the 7.5 inch payload bay to the 4 inch rocket air frame will be 3 inches in length. This will provide sufficient room for the solar irradiance and the ultraviolet probes to be mounted in the forward transition in order that they have a higher probability of maintaining an attitude in the direction of the sun. Both the drogue and main parachutes deploy above the science payload bay thus ensuring a vertical orientation.

Vents in the bottom transition will permit atmospheric equilibrium for the barometric pressure sensor. The relative humidity, atmosphere temperature, and the roll detection sensors will be mounted vertically on the science payload bay walls.

The Memory Stick Data logger is a USB host bridge which creates a connection between a USB mass storage device, such as a Thumb Drive, to the BASIC Stamp microcontroller. The data can be transferred to a computer via the USB mass storage device. Each of the four BASIC Stamp controlled sensors will have a memory stick data logger and each is independent of each other.

IV.1a Barometric Pressure

The VTI SCP1000 is an absolute pressure sensor which can detect atmospheric pressure from 30-120 kPa (30,000 to -5000 feet). The pressure data is internally calibrated and temperature compensated. Its resolution is 1.5 Pascals. Pressure equalization between the interior of the science payload bay and the external atmosphere is via vents in the bottom transition cone. The SCP1000 will be mounted on its own Propeller microcontroller board and have its own power

supply and data logging capabilities. Data collection will start five seconds after liftoff which is triggered by an accelerometer.

IV.1b Atmospheric Temperature

The DS1620 is a digital thermometer. It can measure temperature in units of 0.5° Centigrade (C) from –55° C to +125° C, Fahrenheit (F), units of 0.9° F and a range of –67° F to +257° F. The fastest the DS1620 can generate new temperature data is once per second. The sensor unit will be mounted on its own BASIC Stamp microcontroller board and have its own power supply and data logging capabilities. The sensor itself will be mounted on the vertical wall of the lower half of the science payload bay. Data collection will start five seconds after liftoff which is triggered by an accelerometer.

IV.1c Relative Humidity

The Sensirion SHT11 Sensor Module measures relative humidity from 0% to 100%. It has a 3.5% range of accuracy. This module has a heater that in high humidity applications, the heater can be switched on briefly to prevent condensation. The sensor will be mounted on the vertical wall of the science payload's top section and have access to the external atmosphere. The sensor will be mounted on its own BASIC Stamp microcontroller board and have its own power supply and data logging capabilities. Data collection will start five seconds after liftoff which is triggered by an accelerometer.

IV.1d Solar Irradiance

The solar irradiance unit determines how much available sunlight (solar insolation) there is at a location. The silicon pyranometer is based on a PIC16F88-I/P microcontroller and will have its own data logger and power supply. Its probe will be mounted in the forward transition cone so that the probability of it receiving sunlight is higher than if it were mounted on the vertical side. The irradiance range it from 0 to 1520 watts per meter squared (W/m^2). The resolution is 1.5 W/m^2. Readings are taken every 10 seconds. Data collection will start five seconds after liftoff which is triggered by an accelerometer.

IV.1e Ultraviolet Radiation

The UV radiation sensor will be mounted on the top layer of the electronics stack. Its probe will be located in the forward transition cone so that the probability of it receiving sunlight is higher than if it were mounted on the vertical side. The UV range is from 0 to 30 milliwatts per square centimeter (mW/cm^2). The recording level is one reading per second. Data collection will start five seconds after liftoff which is triggered by an accelerometer.

IV.1f Science Payload Bay Temperature

The MLX90614 infrared thermometer modules is an intelligent non-contact temperature sensor. The sensor is designed for non-contact temperature measurements of objects placed within a sensor's 90 degree cone of detection. The temperature output data, ranges from -70 to +380 °C. The sensor will be

mounted on its own BASIC Stamp microcontroller board and have its own power supply and data logging capabilities. Data collection starts when the altimeter is armed and continues throughout the flight.

IV.1g Rocket Roll Detection and Measurement

The Texas Advanced Optical Systems (TAOS) TSL230R measures light intensity using an array of photodiodes and outputs a square wave whose frequency is proportional to light intensity striking the surface of the chip. We want to collect roll data because we hypothesize that the rocket's rolling will affect the solar irradiance and ultraviolet readings and perhaps we can use the roll data in conjunction with analyzing the UV and solar irradiation data. The probe will be mounted on an 8 to 10 inch cable and located in the vertical side of the science payload pay. The change in light intensity should allow us to determine the roll rate and how long the sensor was aimed in the sun's direction. The sensor will be mounted on its own BASIC Stamp microcontroller board and have its own power supply and data logging capabilities. Data collection will start immediately after liftoff which is triggered by an accelerometer.

IV.1g Photography

The camera, 0.5 x 0.75 x 2.75 inches will be mounted on the airframe near the nose cone. It will be mounted in an inverted position so that it will record with the sky at the top of the picture frame after the drogue parachute has deployed and is descending. We are still brainstorming on how to ensure that the camera is up right while the rocket is lying on the ground and taking pictures for the requisite 10 minutes. The camera will start recording when the altimeters are armed.

IV.1h Data Recovery

Data retrieval will take place after recovery. The USB data storage drives will be removed from their appropriate sensor modules and the data downloaded to the team's laptop computer. The data will be downloaded to at least two computers for data safety. Camera data will be treated the same. Figure 8 illustrates the science bay payload construction and layout concept.

Northwest Indian College Science Payload Bay Concept

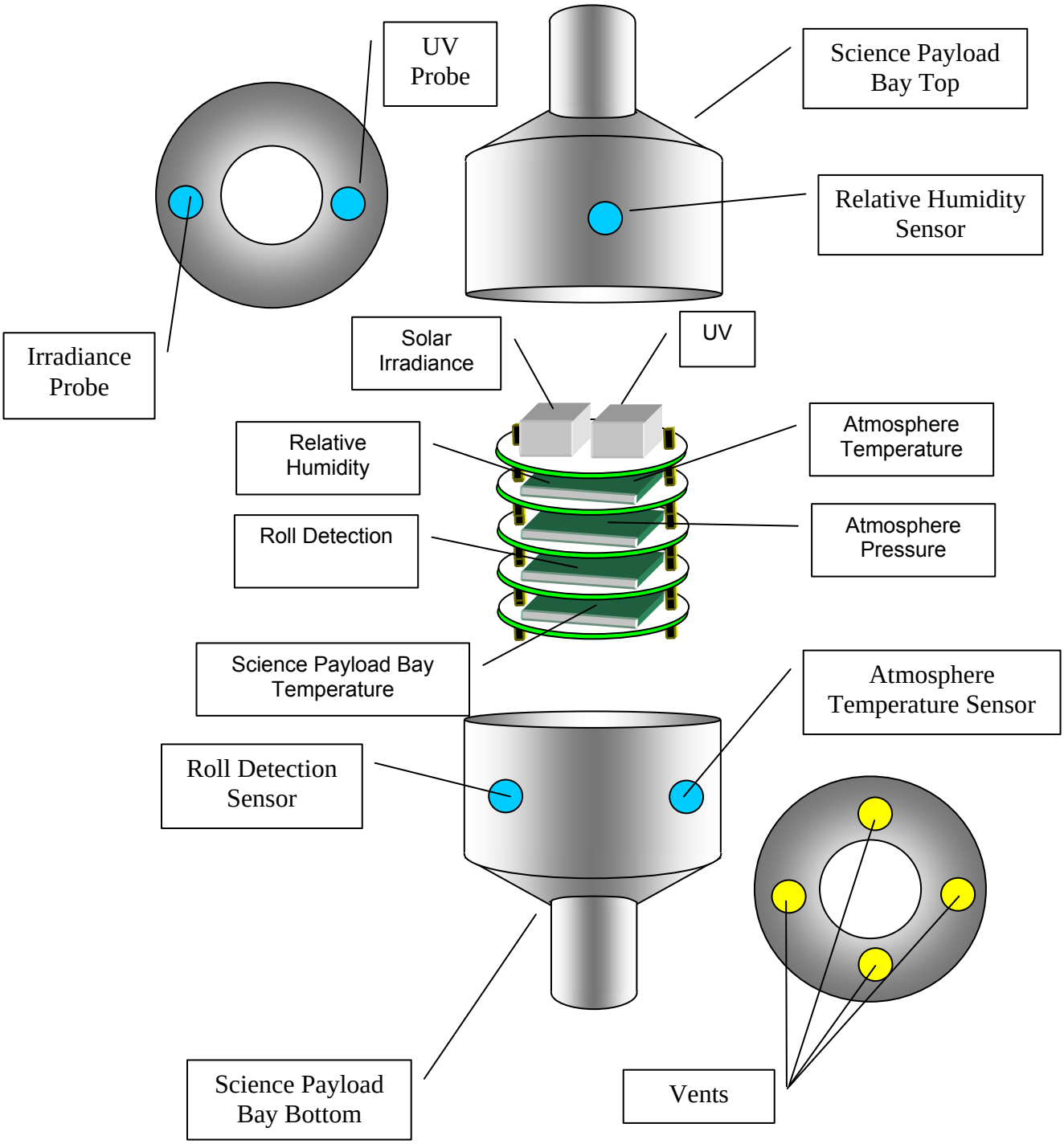

Figure 8

IV.2 Payload Concept Features and Definition

IV.2.a Creativity and Originality

None of the team members has any electronic or microcontroller programming experience. This learning experience is taking place because the students believe that they can learn enough in a timely manner to construct and test the sensors and to install them in the rocket in such a fashion that the data collected will be meaningful to them as well as to the USLI panel of scientists and engineers.

IV.2.b Uniqueness or Significance

Each sensor or probe will have its own microcontroller and associated electronics. Sensors and microcontroller circuitry will have to be constructed and then programmed to do the measurements and data logging. The microcontrollers are entirely independent of one another, including their power supplies. This photo is of a representative sensor module; this one utilizes a light-to-frequency converter to measure changes in light intensity and then records the data to a data logger that houses a mini-usb drive (full size USB in photo).

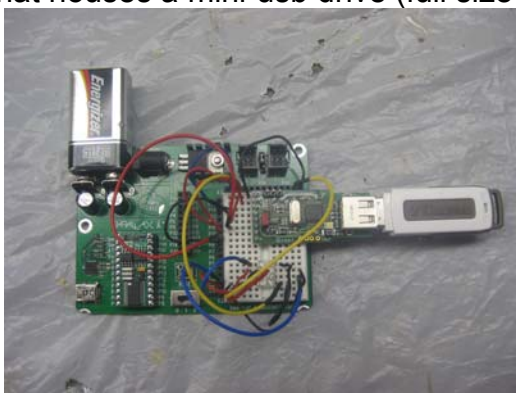

IV.2.c Suitable Level of Challenge

This is a totally new process for most of us. We've had a little experience since January 2010 in building, and flying high powered rockets. We've had little to no experience in developing electronic experiments. We've had little to no experience working on a project of this magnitude. That being said, RezRiders are confident that we can pull this off. Our advisors, Gary and Dave, are totally supportive and help us find answers, figure out how to find solutions to our challenges. This is true of our mentor, Bill, as well.

IV.3 Science Value

IV.3a Payload Objectives

RezRider's intention is two faceted: 1) gather atmospheric data and present it in a meaningful format; and, 2) gather data from the rocket itself to learn more about our rocket.

The first objective involves building sensor and probe modules to sample atmospheric temperature, humidity, and pressure. Also we will be building an ultraviolet radiation sensor and a solar irradiance sensor. All six of the experiments are independent of one another.

The second objective will gather and analyze rocket data from additional sensors. One will convert light frequency to digital data in order that we can measure the longitudinal roll of our rocket. The second sensor will measure and record the temperature within the science payload bay.

Our major reasons for doing this with individual sensor modules is to not only satisfy the SMD goals, but to enhance the learning and knowledge of our team members, none of whom have had any electronic or microcontroller experience prior to this project.

IV.3b Payload Success Criteria

Can we build the modules? Can we make them work? Can we program them to do what we want? Can we integrate the sensors and data loggers? Can we collect data? And lastly, can we analyze and report the data gathered in a meaningful manner?

A, “Yes” to all of the previous questions is our goal. The team realizes that there are varying degrees of acceptable performance for each of the modules and an overall payload success criteria falls in the range of total failure to perfection, 0% to 100%. Furthermore, each module has its own degree of difficulty in building, programming, mounting, and sensor/data logging requirements.

Module	Construction		Programming		Mounting	
	Prototype	Competition	Prototype	Competition	Prototype	Competition
Atmospheric Temperature	1.0	2.0	2.0	2.0	1.0	3.0
Barometric Pressure	3.0	1.0	2.0	2.0	1.0	1.0
Humidity	2.0	1.0	2.0	2.0	1.0	1.0
Solar Irradiance	3.0	3.0	3.0	3.0	1.0	3.0
UltraViolet Radiation	2.0	3.0	2.0	2.0	1.0	3.0
Rocket Roll	1.0	3.0	3.0	3.0	1.0	3.0
Science Payload Bay Temperature	1.0	1.0	2.0	2.0	1.0	1.0
Averages	1.9	2.0	2.3	2.3	1.0	2.1

Module	Sensor Integration		Data Logging Integration		Averages	
	Prototype	Competition	Prototype	Competition	Prototype	Competition
Atmospheric Temperature	1.0	3.0	2.0	2.0	1.4	2.4
Barometric Pressure	1.0	3.0	2.0	2.0	1.8	1.8
Humidity	1.0	2.0	2.0	2.0	1.6	1.6
Solar Irradiance	3.0	3.0	3.0	3.0	2.6	3.0
UltraViolet Radiation	3.0	3.0	3.0	3.0	2.2	2.8
Rocket Roll	2.0	3.0	3.0	3.0	2.0	3.0
Science Payload Bay Temperature	1.0	2.0	2.0	2.0	1.4	1.6
Averages	1.7	2.7	2.4	2.4	1.9	2.3

Difficulty Scale: Easy=1, Medium=2, Difficult=3

IV.3c Experimental Logic, Approach, and Investigation Method

RezRiders' logic and approach is to meticulously build everything, provide a thoughtful approach to reaching our goals, be acutely aware of safety, put the rocket into the air and analyze the data that we retrieve.

IV.3d Test and Measurement, Variables, and Controls

We will be evaluating our atmospheric sensor modules by comparing the sensor results with standard scientific measuring tools such as laboratory quality thermometers, barometers, and hygrometers. We are creating a device to rotate the science payload at a fixed rpm in order to calibrate our roll detection sensor. Prior to the competition flight, we will have a baseline for each of the sensors that we have developed from a controlled environment. Our roll measurement data may help to explain the solar irradiance and UV measurements since those data are generally measured in a static environment.

IV.3e Relevance of Expected Data and Accuracy/Error Analysis

Since the sensor modules are under programming logic, we should be able to programmatically correct any consistent discrepancies between our sensors and standard scientific measurement tools. What will interesting is how much, if any,

the data collected through actual flights differs from static data collection. If there are significant differences, that will be a challenging task to evaluate the differences and to be able to compensate for accuracy.

IV.3f Preliminary Experimental Procedures

After having built and tested the prototype sensor modules, we will be building robust modules that will be able to withstand the rigors of a high powered rocket flight. The competition modules will then be mounted in the science payload bay and a series of static tests will be developed and carried out for each of the sensors. Data collection and analysis will allow us to make any programming changes or other modifications necessary to obtain consistent and accurate results. Test, evaluate, modify, and repeat as necessary.

V) Activity Plan

V.1 Activities and Schedule Status

As of November 18, 2010, we are on schedule and have built in enough high-altitude launch days to be successful in our activity plan. We are negotiating with the Tribal schools and several public schools for out reach. No firm dates have been established.

November 2010:

3 Test recovery ejection systems
3 Begin assembling and testing payload components
6 Dual deployment test & NAR L2 certification flights
6 Launch scale rocket
19 Preliminary Design Review (PDR) report and PDR presentation slides posted on the team Web site
29 Competition rocket construction complete
30 Competition rocket low-altitude test flight

December 2010:

6-10 Preliminary Design Review Presentations (tentative)

January 2011:

15 launch competition rocket
24 Critical Design Review (CDR) reports and CDR presentation slides posted on the team Web site.

February 2011:

2-8 Critical Design Review Presentations (tentative)
19 launch competition rocket

March 2011:

12 launch competition rocket
21 Flight Readiness Review (FRR) reports and FRR presentation slides posted on the team Web site.
28-31 Flight Readiness Review Presentations (tentative)

April 2011:

13 Travel to Huntsville

14-15 Flight Hardware and Safety Checks (tentative)

16 Launch Day

May 2011:

9 Post-Launch Assessment Review (PLAR) posted on the team Web site.

V.1a Budget Plan

RezRiders are within the budget parameters. Where there has been a cost increase, there has been a corresponding cost decrease. Changes are noted via green as a dollar amount decrease and red as a dollar amount increase. An unanticipated expenditure may be additional motors for more flight tests. Our budget will allow this, if necessary.

Qty	Description		Total Price
	Scale Model Rocket		
2	3.90" (98mm) Airframe Tubing	$10.45	$20.90
1	7.51" Airframe Tube - 2x30" + TC	$26.95	$26.95
1	3.90" (98mm) Plastic Nose Cone	$20.95	$20.95
1	54mm Motor Mount Tube	$7.35	$7.35
3	Tube Coupler 3.90" (98mm) Tube	$4.50	$13.50
2	Centering Ring CR-7.51-3.90	$10.50	$21.00
6	1/4" Plywood	$6.99	$41.94
3	Pair of Centering Rings CR-3.90-2.14	$8.10	$24.30
2	3.90" (98mm) Bulkhead Assembly	$4.05	$8.10
			$184.99

	Competition Rocket		
2	3.90" (98mm) Airframe Tubing	$10.45	$20.90
1	7.51" Airframe Tube - 2x30" + TC	$26.95	$26.95
1	54mm Motor Mount Tube	$7.35	$7.35
3	Tube Coupler 3.90" (98mm) Tube	$4.50	$13.50
2	Centering Ring CR-7.51-3.90	$10.50	$21.00
6	1/4" Plywood	$6.99	$41.94
3	Pair of Centering Rings CR-3.90-2.14	$8.10	$24.30
2	3.90" (98mm) Bulkhead Assembly	$4.05	$8.10
			$164.04

	Motors		
4	K impulse	$149.99	$599.96
1	RMS-54/1706 MOTOR	$190.00	$190.00
			$789.96

	Miscellaneous Parts		
1	Misc Construction Supplies - paint, glue	$200.00	$200.00
1	Misc hardware - bolts, nuts, links	$50.00	$50.00
			$250.00

Recovery System			
1	Recovery materials, nomex, nylon, kevlar	$60.00	$60.00
1	Black Powder	$40.00	$40.00
1	78" Parachute	$79.95	$79.95
1	28" Parachute	$16.75	$16.75
1	RDAS-Tiny altimeter	$300.00	$300.00
2	MAWD Altimeter	$99.95	$199.90
2	Safety switches for electronics	$15.00	$30.00
			$726.60

Payload and Tracking System			
1	GPS Unit	$495.00	$495.00
1	Payload camera	$9.95	$9.95
1	Science Payload	$1,200.00	$1,200.00
			$1,054.95
		Total	**$3,820.54**

Travel			
6	travel to Mansfield for 3000'+ launches	$75.00	$450.00
6	travel to Atlanta	$412.00	$2,472.00
6	lodging Atlanta	$200.00	$1,200.00
			$4,122.00

Project Income			
	NASA SMD		$5,000.00
	Outreach		$1,500.00
	Washington State Space Grant		$500.00
	Tribal Support		$3,000.00
			$10,000.00

Budget Summary	
Scale Rocket	$184.99
Competition Rocket	$164.04
Propulsion	$789.96
Construction Supplies	$250.00
Recovery	$726.60
Electronics & Payload	$1,054.95
	$3,820.54

Travel & Lodging	$4,122.00

Project Income	
	$10,000.00

V.1b Timeline

As of November 18, 2010, we are on schedule to meet our deadlines.

V.1c Educational Engagement

We are negotiating with the Tribal schools and several public schools for outreach. No firm dates have been established.

Our schedule for this year includes the following:

October	Opening Ceremony and HPR launch at the NWIC Space Center Launch Complex
November	Rocketry presentation to Lummi Nation Elementary School
January	Water Bottle Rocketry unit and launch with Kulshan Elementary School
	Water Bottle Rocketry unit and launch with Shuksan Middle School
February	Water Bottle and Model Rocketry unit and Launch with Lummi Nation Middle School
March	Northwest Indian College Career Fair presentation

VI) Conclusion

The RezRiders are confident in the design that we have created to meet the overall mission requirements in the USLI competition. The complete design be tested in the very near future. Any design flaws or improvements, subtle or otherwise, will be addressed well before the final launch in April; this will ensure that the mission safe as well as successful.

The payload presents many challenges to the RezRiders. The team involvement in such a challenging environment can't help but make us better students.

Safety is our greatest priority. We insure this by creating and following rigorous launch checklists. Testing, testing, and more testing add to the safety margin. Our mentor plays an important role in following our course of action and stepping in where necessary to challenge our assumptions.

The overall success of the RezRiders is dependent upon dedication, hard work, and the excitement of doing something that none of us as previously done.

Appendix A - Northwest Indian College Space Center (NWIC-SC) Rocket Launches

As consideration for the opportunity to participate in NWIC-SC launches, I hereby release and forever discharge the National Association of Rocketry (NAR), the Tripoli Rocketry Association (TRA) and their officers, members, administrators, agents and assigns; Northwest Indian College Space Center and its officers, members and agents; the launch site's landowners, administrators and caretakers including the state of Washington and all other persons attending NWIC-SC launches from suits of any kind or nature whatsoever resulting from attending NWIC-SC events. This release and discharge includes but is not limited to suits involving injury and/or property loss or damage resulting from accidents which might happen to me and/or to those who accompany me to Northwest Indian College Space Center launches.

When attending NWIC-SC launch events, I hereby agree to fly high power rocket motors of "H" impulse and above only if I possess a valid NAR or TRA High Power Certification. I affirm that I possess valid copies of all permits and paperwork required to legally fly high power rocket motors. Further more, I will never fly rocket motors more powerful than my certification will allow except when engaged in a formally supervised NAR or TRA certification flight attempt. I also agree that I will fly only commercially manufactured rocket motors that are certified for use by NAR and/or TRA.

I am fully aware of the risks involved in traveling to and participating in rocketry events and hereby assume all of those risks. I agree further that I have completely read, fully understood the terms of and voluntarily accept this agreement. Furthermore, I agree to follow the NAR and TRA Safety Codes as well as all local, state and federal laws, regulations and rules that apply to NWIC-SC launches.

Name (Please print) _____

Signature & Date_____

Parent/Guardian (17 and younger)_____

Address _____

City State Zip_____

Email address_____

Phone ( ) _____

NAR Membership _____ Cert Level _____ Expires_____

TRA Membership _____ Cert Level _____Expires _____

Appendix B - GSE Check List

- ❑ Fire Extinguisher
- ❑ 1st Aid Kit
- ❑ Launch Legs
- ❑ Launch Rail
- ❑ Launch Leg Connector
- ❑ Launch Blast Shield
- ❑ Control Box
- ❑ Igniter Cables
- ❑ Launch Batteries
- ❑ Igniter Clips
- ❑ Weather Station
- ❑ Compass/Direction Recorder
- ❑ Cell Phone
- ❑ Phone Numbers
- ❑ Fireproof Blanket
- ❑ Writing Pad
- ❑ Pencils/Pens
- ❑ Sandpaper
- ❑ Flight Card
- ❑ Liability Waiver
- ❑ Flight Data Sheets
- ❑ Windicator
- ❑ Mosquito Repellant (seasonal)
- ❑ FSR Radios w/fresh batteries
- ❑ Video/Still Camera
- ❑ Clipboard

Appendix C - Final Assembly Check List

Pre Launch Assembly Steps

- ❑ Check all “fresh” batteries for 8.5 v or higher

Altimeter ebay preparation

Electronics

- ❑ Replace both batteries in altimeter ebay
- ❑ Connect primary drogue wires to primary drogue electric match connecting posts
- ❑ Connect primary drogue wires to secondary drogue electric match connecting posts
- ❑ Connect primary drogue wires to primary main electric match connecting posts
- ❑ Connect primary drogue wires to secondary main electric match connecting posts
- ❑ Check connection terminals for security
- ❑ Slide altimeter sled onto ebay rails
- ❑ Insert fail-safe power switch rods through ebay and altimeter power switches
- ❑ Insert top and bottom bulkheads and secure with wing nuts

BP Canisters

- ❑ Connect electric matches to both drogue connecting posts
- ❑ Fill primary drogue BP canister with primary BP grams
- ❑ Fill secondary drogue BP canister with secondary BP grams
- ❑ Insert e-matches and fill remaining canister space with “fire proof” material
- ❑ Secure the top of both BP canisters with tape
- ❑ Connect electric matches to both main connecting posts
- ❑ Fill primary main BP canister with primary BP grams
- ❑ Fill secondary main BP canister with secondary BP grams
- ❑ Insert e-matches and fill remaining canister space with “fire proof” material
- ❑ Secure the top of both BP canisters with tape

Connect to airframe

- ❑ Insert ebay into airframe
- ❑ Secure main parachute bay with nylon shear pins
- ❑ Secure drogue parachute bay with nylon shear pins
- ❑ Check vent holes are clear

Science payload bay preparation

- ❑ Replace all batteries in science payload bay
- ❑ Download control programs to each module
- ❑ Check sensors and probes secured in position
- ❑ Check sensor and probe connections to respective science module
- ❑ Check power connections from each module to power bus
- ❑ Check motion detect/master power switch is off
- ❑ Check power bus switch is on
- ❑ Check all module switches are on
- ❑ Check science modules fastened securely to mounting brackets
- ❑ Slide science payload bay top section over bottom section and secure with screws
- ❑ Secure science payload bay to main parachute bay and to fin can
- ❑ Check vent holes are clear
- ❑ Check sensors and probes have clear access to the exterior

GPS tracking system preparation

- ❑ Charge tracking transmitter the night before launch
- ❑ Replace receiver batteries with AA batteries greater than 1.4 volts

- ❑ Check tracker mounted securely to nose cone board
- ❑ Power tracker on
- ❑ Insert nose cone board into nose cone
- ❑ Fasten with screws
- ❑ Insert nose cone into drogue recovery bay and fasten with screws

Secondary tracking system preparation

- ❑ Check on for “screamer” sound and then turn off
- ❑ Fasten to drogue parachute-shock cord intersection
- ❑ Pack drogue parachute
- ❑ Turn on
- ❑ Pack with drogue parachute

Pre-Launch

- ❑ Prepare motor according to manufacturer’s directions
- ❑ Insert motor into motor mount
- ❑ Secure motor with motor retainers
- ❑ Report to LCO/RSO
- ❑ Move rocket to launch pad and continue with Pre-Launch Preparation check list

Appendix D - Pre-Launch Preparation Checklist

Motor Preparation and Installation

- ❑ Prepare motor per packaged instructions for launch.
- ❑ Tape motor casing for snug fit in motor tube.
- ❑ Install motor.
- ❑ Install motor retaining devices.
- ❑ Insure all electronic deployment devices are in the non-dischargeable safed mode.

Recovery System Preparation

Recovery System, Drogue Chute:

- Check all connections. Insure all devices are in good condition and properly secured:

- ❑ Aft bay shock cord to drogue
- ❑ Booster shock cord to drogue

- Pack drogue chute in deployment bag, keep lines even and straight.

- ❑ Fold drogue chute per manufacturer's instructions.
- ❑ Insure shroud lines are free from tangles.
- ❑ Insure all quick links are secure.
- ❑ Insert ejection charge protection.
- ❑ Insert drogue bag/chute into drogue recovery compartment.

Recovery System, Main Chute

- Check all connections. Insure all devices are in good condition and properly secured:

- ❑ Forward bay shock cord to shock cord mount
- ❑ Forward bay shock cord to main

- Pack main chute in deployment bag, keep lines even and straight.

- ❑ Fold main chute per manufacturer's instructions.
- ❑ Insure shroud lines are free from tangles.
- ❑ Insure all quick links are secure.
- ❑ Insert ejection charge protection.
- ❑ Insert main bag/chute into forward recovery compartment

Recovery System, Nose Cone Chute

- Check all connections. Insure all devices are in good condition and properly secured:

- ❑ Nose Cone shock cord to main deployment bag
- ❑ Nose Cone shock cord to nose cone parachute

- Pack nose cone parachute, keep lines even and straight.

- ❑ Fold main chute per manufacturer's instructions.
- ❑ Insure shroud lines are free from tangles.
- ❑ Insure all quick links are secure.
- ❑ Insert main bag/chute into forward recovery compartment
- ❑ Secure Nose Cone in place

Electronics/Pyrotechnics

Pyrotechnics, drogue

- ❑ Prepare aft deployment pyrotechnic device and ready for installation into rocket.
- ❑ Load aft charge into rocket, insure at all times the devices are safed until final launch readiness.
- ❑ Utilizing external disarming mechanisms to insure all electronically discharged pyrotechnics are disabled until final launch readiness.

Pyrotechnics, main

- ❑ Prepare forward deployment pyrotechnic device and ready for installation into rocket.
- ❑ Load forward charge into rocket, insure at all times the devices are safed until final launch readiness.
- ❑ Utilizing external disarming mechanisms to insure all electronically discharged pyrotechnics are disabled until final launch readiness.

Prepare avionics #1

- ❑ Be sure all arming switches are off.
- ❑ Ohmmeter test of *NEW* battery under load
- ❑ Install battery in altimeter.
- ❑ Secure battery in place with positive battery retention system.
- ❑ Altimeter properly programmed and verified.
- ❑ Connect aft pyrotechnic leads to electronic deployment device.
- ❑ Connect forward pyrotechnic leads to electronic deployment device

Prepare avionics #2

- ❑ Be sure all arming switches are off.
- ❑ Ohmmeter test of *NEW* batteries under load
- ❑ Install batteries in altimeter.
- ❑ Secure batteries in place with wire ties and tape.
- ❑ Flight computer properly programmed and verified.
- ❑ Connect aft pyrotechnic leads to electronic deployment device.
- ❑ Connect forward pyrotechnic leads to electronic deployment device
- ❑

Insure all pyrotechnics are in disarmed mode during electronics final installation.

Install avionics

- ❑ Ready avionics bay for altimeter.
- ❑ Turn photoelectric verification circuit ON.
- ❑ Install altimeter in rocket.

Note: All pyrotechnic devices must remain in an unarmed mode until rocket is on pad ready to launch.

Appendix E - Final Launch Preparation Checklist

Load Rocket on Pad

- ❑ Take rocket to assigned pad
- ❑ Prepare launch pad.
- ❑ Verify pad will hold rocket properly
- ❑ Mount proper rod/rail onto pad
- ❑ Tilt pad, slide rocket onto rod/rail
- ❑ Tilt pad/rocket upright
- ❑ Activate and final check electronics
- ❑ Verify pad power is OFF

Prepare Igniter

- ❑ Assure that key IS NOT in remote device and that arming switch is off.
- ❑ Insert igniter. Be sure it is positioned correctly
- ❑ Secure igniter in position
- ❑ Assure that launcher is not hot. Assure that key IS NOT remote device and that arming switch is off.
- ❑ Attach leads to ignition device.
- ❑ Be sure all connectors are clean.
- ❑ Be sure they don't touch each other or that circuit is not grounded by contact with metal parts.
- ❑ Check tower's position and be sure it is locked into place and ready for launch.

Final Launch Sequence

- ❑ Insure Flight Witnesses are in place and ready for launch.
- ❑ Arm all devices for launch.
- ❑ Return to Safe Area
- ❑ Ready cameras
- ❑ Signal LCO & RSO that rocket is ready for launch.
- ❑ Countdown and launch

Misfire Procedures

- ❑ Wait 60 seconds per NAR
- ❑ Safe all pyrotechnics to pre-launch mode.
- ❑ Remove failed igniter
- ❑ Resume checklist at "Final Launch Preparations/Prepare Igniter."

Appendix F - Post-Recovery Checklist

Normal Post Flight Recovery

- ❑ Check for non-discharged pyrotechnics.
- ❑ Safe all ejection circuits.
- ❑ Remove any non-discharged pyrotechnics.

Flight Failure Checklist

- ❑ Disarm all non-fired pyrotechnic devices.
- ❑ Continue Normal Post Flight Recovery procedures.
- ❑ Fall on ground and cry.

Appendix G - High Power Rocket Safety Code

1. **Certification.** I will only fly high power rockets or possess high power rocket motors that are within the scope of my user certification and required licensing.
2. **Materials.** I will use only lightweight materials such as paper, wood, rubber, plastic, fiberglass, or when necessary ductile metal, for the construction of my rocket.
3. **Motors.** I will use only certified, commercially made rocket motors, and will not tamper with these motors or use them for any purposes except those recommended by the manufacturer. I will not allow smoking, open flames, nor heat sources within 25 feet of these motors.
4. **Ignition System.** I will launch my rockets with an electrical launch system, and with electrical motor igniters that are installed in the motor only after my rocket is at the launch pad or in a designated prepping area. My launch system will have a safety interlock that is in series with the launch switch that is not installed until my rocket is ready for launch, and will use a launch switch that returns to the "off" position when released. If my rocket has onboard ignition systems for motors or recovery devices, these will have safety interlocks that interrupt the current path until the rocket is at the launch pad.
5. **Misfires.** If my rocket does not launch when I press the button of my electrical launch system, I will remove the launcher's safety interlock or disconnect its battery, and will wait 60 seconds after the last launch attempt before allowing anyone to approach the rocket.
6. **Launch Safety.** I will use a 5-second countdown before launch. I will ensure that no person is closer to the launch pad than allowed by the accompanying Minimum Distance Table, and that a means is available to warn participants and spectators in the event of a problem. I will check the stability of my rocket before flight and will not fly it if it cannot be determined to be stable.
7. **Launcher.** I will launch my rocket from a stable device that provides rigid guidance until the rocket has attained a speed that ensures a stable flight, and that is pointed to within 20 degrees of vertical. If the wind speed exceeds 5 miles per hour I will use a launcher length that permits the rocket to attain a safe velocity before separation from the launcher. I will use a blast deflector to prevent the motor's exhaust from hitting the ground. I will ensure that dry grass is cleared around each launch pad in accordance with the accompanying Minimum Distance table, and will increase this distance by a factor of 1.5 if the rocket motor being launched uses titanium sponge in the propellant.
8. **Size.** My rocket will not contain any combination of motors that total more than 40,960 N-sec (9208 pound-seconds) of total impulse. My rocket will not weigh more at liftoff than one-third of the certified average thrust of the high power rocket motor(s) intended to be ignited at launch.
9. **Flight Safety.** I will not launch my rocket at targets, into clouds, near airplanes, nor on trajectories that take it directly over the heads of spectators or beyond the boundaries of the launch site, and will not put any flammable or explosive payload in my rocket. I will not launch my rockets if wind speeds exceed 20 miles per hour. I will comply with Federal Aviation Administration airspace regulations when flying, and will ensure that my rocket will not exceed any applicable altitude limit in effect at that launch site.
10. **Launch Site.** I will launch my rocket outdoors, in an open area where trees, power lines, buildings, and persons not involved in the launch do not present a hazard, and that is at least as large on its smallest dimension as one-half of the maximum altitude to which rockets are allowed to be flown at that site or 1500 feet, whichever is greater.
11. **Launcher Location.** My launcher will be 1500 feet from any inhabited building or from any public highway on which traffic flow exceeds 10 vehicles per hour, not including traffic flow related to the launch. It will also be no closer than the appropriate Minimum Personnel Distance from the accompanying table from any boundary of the launch site.
12. **Recovery System.** I will use a recovery system such as a parachute in my rocket so that all parts of my rocket return safely and undamaged and can be flown again, and I will use only flame-resistant or fireproof recovery system wadding in my rocket.
13. **Recovery Safety.** I will not attempt to recover my rocket from power lines, tall trees, or other dangerous places, fly it under conditions where it is likely to recover in spectator areas or outside the launch site, nor attempt to catch it as it approaches the ground.

MINIMUM DISTANCE TABLE				
Installed Total Impulse (Newton-Seconds)	**Equivalent High Power Motor Type**	**Minimum Diameter of Cleared Area (ft.)**	**Minimum Personnel Distance (ft.)**	**Minimum Personnel Distance (Complex Rocket) (ft.)**
0 -- 320.00	H or smaller	50	100	200
320.01 -- 640.00	I	50	100	200
640.01 -- 1,280.00	J	50	100	200
1,280.01 -- 2,560.00	K	75	200	300
2,560.01 -- 5,120.00	L	100	300	500
5,120.01 -- 10,240.00	M	125	500	1000
10,240.01 -- 20,480.00	N	125	1000	1500
20,480.01 -- 40,960.00	O	125	1500	2000

Note: A Complex rocket is one that is multi-staged or that is propelled by two or more rocket motors

Appendix H - Range Safety Regulations

I , _____, have fully read and fully understand the following regulations relating to operating high powered rockets:

1. The National Association of Rocketry High Powered Rocketry Safety Code
2. The National Fire Protection Association (NFPA) 1127: “Code for High Powered Rocket Motors".
3. The Federal Aviation Regulations 14 CFR, Subchapter F Subpart C “Amateur Rockets”.

Also, I understand that the Range Safety Officer has the right to deny any rocket from launch. Before launch I will check with the RSO about:

1. Safety inspection of my rocket
2. Checking the stability of my rocket (center of pressure and center of gravity locations).
3. Weather conditions at the launch pad and predicted altitude
4. Electronics such as altimeters, timers, flight computers, etc.
5. Best recovery options including: Descent rates, launch pad inclination, etc.

Safety is the number one priority for the NWIC Space Center. I hereby reaffirm my commitment to keeping myself, my teammates, launch participants, and the environment safe from risk, harm, and damage.

Signed:

_____

Appendix I - Launch Wavier Activation

Date	Time	Initials	Agency	Phone	Timing
			NOTAM	877-487-6867	24-72 hrs
			BLI ATC	360-734-2745	24-48 hrs
			Vancouver ACC	604-586-4560	24-48 hrs
			BLI ATC	360-734-2745	30-45 min
			Vancouver ACC	604-586-4560	5-10 min
			NOTAM	**877-487-6867**	**Operations Concluded**
			BLI ATC	**360-734-2745**	
			Vancouver ACC	**604-586-4560**	

½ nm radius of the Whatcom VOR (HUH), 175 degree radial at 9 nm
Latitude 48°47’38.44”N. Longitude 122°38’26.09”W

High Power Flight Card

Northwest Indian College Space Center

Date: _____

RSO Initials _____

Rod/Rail # _____

Rocketeer's Name: _____

Tripoli / NAR# _____ Current Cert Level: ___

Rocket Manufacturer: _____

Rocket Name: _____

Source: ☐ Kit ☐ Custom Color: _____

Length: _____ Diameter: _____

Weight: _____ First Flight of Rocket?: ___

Modifications: _____

Launching on: Rod ☐ Rail ☐

Motor(s): ☐ Single ☐ Clustered ☐ Staged ☐ Air Starts

Main Motor: _____

More than one motor? If YES, see back: _____

Recovery: ☐ Motor Eject ☐ Electronics ☐ Dual Deploy

Recovery via: ☐ Chute ☐ Streamer ☐ Other _____

Electronics: _____

Other Payload: _____

I certify that the assembly and installation of this motor is per the manufacturer's printed instructions and that the construction, deployment and recovery system of this rocket is per the NAR/Tripoli Safety Code. I certify that I have a current, signed NWIC Space Center Liability Waiver and Participation Agreement on file for this launch date.

Signed: _____

Good Flight ☐

Failed Flight Reason
☐ Cato ☐ Hard impact
☐ Shred ☐ Recovery Failed

☐ Certification Flight: ☐ L1 ☐ L2 ☐ L3 Certifier: _____

☐ Special Flight Info: _____

Instructions

Fill in all the information on the front of the card. If you need help or have questions, please ask the RSO or LCO. She/he will gladly help!

Other Information Box

1. If you have clustered, multiple stage or a complex engine configuration, you must fill in the total combined impulse of your motors in this box.
2. Use this space to indicate any other special notes about the flight.

Other Information:

Appendix J - HPR Flight Card