599 Menlo Drive, Suite 100
Rocklin, California 95765, USA
Office: (916) 624-8333
Fax: (916) 624-8003

General: info@parallax.com
Technical: support@parallax.com
Web Site: www.parallax.com
Educational: www.stampsinclass.com

DS2760 Thermocouple Kit (#28022)

1-Wire® Thermocouple Interface

Introduction

Thermocouples provide a low-cost, reliable means of measuring temperature over a wide range. The challenge when using a thermocouple is accurately measuring the very low Seebeck output voltage (fractional to low millivolts) from the element, and providing for cold junction temperature compensation.

The Dallas/Maxim DS2760 High Precision Li+ Battery Monitor is very easily configured into an effective thermocouple interface. The Parallax DS2760 Thermocouple Module capitalizes on this application and provides a complete connection between the BASIC Stamp and a standard thermocouple element.

Features

- 1-Wire® interface allows multiple devices with just one Stamp IO pin
- Cold Junction measurement: 0°C to +127°C (0.125°C resolution)
- Low power consumption:
  - -- Active current: 90 μA max
  - -- Sleep current: 2 μA max

Packing List

Verify that your DS2760 kit is complete in accordance with the list below:

- DS2760 Thermocouple Module #550-28022
- (3) Thermocouple elements:
  - -- (1) K-type (Chromel / Alumel) #800-00011
  - -- (1) J-type (Iron / Constantan) #800-00012
  - -- (1) T-type (Copper / Constantan) #800-00010
- This documentation

Note: DS2760 demonstration software may be downloaded from www.parallax.com.

Connections

Before connecting the DS2760 Thermocouple Module to the BASIC Stamp you will need to prepare a thermocouple element, and then connect it to the cold junction port of the module. Start by carefully removing about one inch (250 mm) of the outer sleeve from each end of the element. From each lead on the temperature measurement end, remove about ½ inch (125 mm) of insulation and then carefully twist together (using pliers if necessary) and trim as shown in Figure 1.

Figure 1: Thermocouple Junction

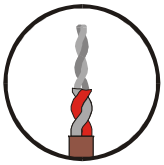

On the cold junction (DS2760 module) end of the element, remove only ¼ inch (60 mm) of insulation from each lead. Route these leads through the bottom of the thermocouple module PCB and insert snuggly into the pin sockets as shown in Figure 2.

Figure 2: Cold Junction Connection to DS2760 PCB

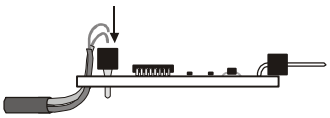

Use this table to ensure that you make the proper thermocouple connections to the module. If the leads are reversed, the measured temperature will be incorrect.

Type	Materials	SNS	Vss
K	Chromel / Alumel	Red	Yellow
J	Iron / Constantan	Red	White
T	Copper / Constantan	Red	Blue

Finally, the DS2760 Thermocouple Module is connected to the BASIC Stamp as shown in Figure 3 below (Note that the module includes a 4.7 KΩ pull-up on the 1-Wire® data line).

Figure 3: DS2760 Connections to BASIC Stamp

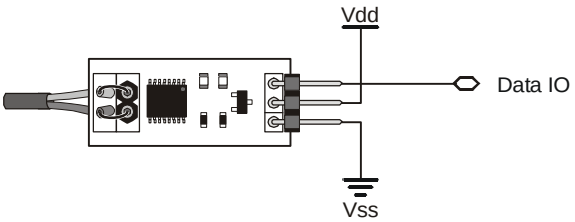

Additional Resources

- Advanced thermocouple interface software (download from Parallax)
- Web Links:
  -- www.maxim-ic.com/quick_view2.cfm/qv_pk/2931
  -- www.capgo.com/Resources/Sensors/Temperature/Thermocouple/Thermocouple.html
  -- instserv.com/rmocoupl.htm
  -- instrumentation-central.com/pages/thermocouple_reference_table.htm
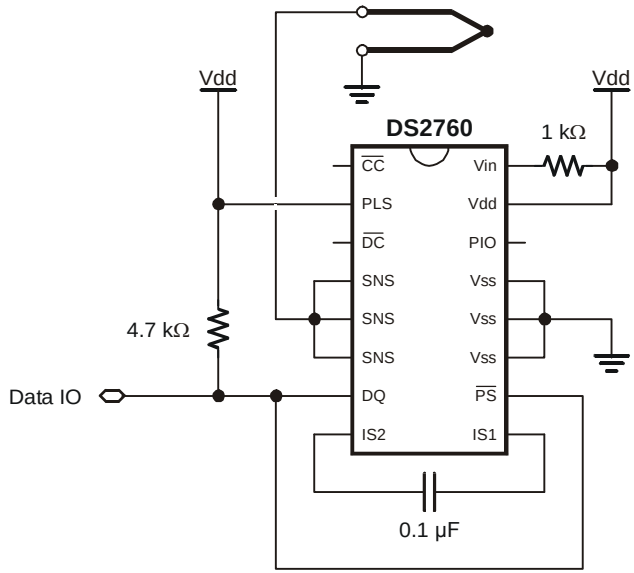
DS2760 Module Schematic